samlexpower®

Evolution™ Series Inverter/Charger

Pure Sine Wave

Models:

EVO-1212F
EVO-1212F-HW
EVO-1224F
EVO-1224F-HW

Owner's Manual

Please read this manual BEFORE operating.

Firmware:
Rev 0.74

SECTION 1
Safety Instructions & General Information 3

SECTION 2
Components & Layout 25

SECTION 3
Installation 30

SECTION 4
General Description and Principles of Operation..... 71

SECTION 5
Battery Charging in Evolution™ Series 80

SECTION 6
Operation, Protections and Troubleshooting 97

SECTION 7
Specifications 105

SECTION 8
Warranty 108

Disclaimer of Liability
UNLESS SPECIFICALLY AGREED TO IN WRITING, SAMLEX AMERICA INC:

1. MAKES NO WARRANTY AS TO THE ACCURACY, SUFFICIENCY OR SUITABILITY OF ANY TECHNICAL OR OTHER INFORMATION PROVIDED IN ITS MANUALS OR OTHER DOCUMENTATION.
2. ASSUMES NO RESPONSIBILITY OR LIABILITY FOR LOSSES, DAMAGES, COSTS OR EXPENSES, WHETHER SPECIAL, DIRECT, INDIRECT, CONSEQUENTIAL OR INCIDENTAL, WHICH MIGHT ARISE OUT OF THE USE OF SUCH INFORMATION. THE USE OF ANY SUCH INFORMATION WILL BE ENTIRELY AT THE USERS RISK.

Samlex America Inc reserves the right to revise this document and to periodically make changes to the content hereof without obligation or organization of such revisions or changes.

Copyright Notice/Notice of Copyright
Copyright © 2016 by Samlex America Inc. All rights reserved. Permission to copy, distribute and /or modify this document is prohibited without express written permission by Samlex America Inc.

SECTION 1 | Safety Instructions & General Information

1.1 IMPORTANT SAFETY INSTRUCTIONS

SAVE THESE INSTRUCTIONS. THIS MANUAL CONTAINS IMPORTANT INSTRUCTIONS FOR MODELS: EVO-1212F, EVO-1212F-HW, EVO-1224F AND EVO-1224F-HW THAT SHALL BE FOLLOWED DURING INSTALLATION & MAINTENANCE OF THE INVERTER/CHARGER.

THE FOLLOWING SYMBOLS WILL BE USED IN THIS MANUAL TO HIGHLIGHT SAFETY AND IMPORTANT INFORMATION:

WARNING!

Indicates possibility of physical harm to the user in case of non-compliance.

MISE EN GARDE!
Il y a une possibilité de faire du mal physique à l'utilisateur si les consignes de sécurités sont pas suivies

CAUTION!

Indicates possibility of damage to the equipment in case of non-compliance.

ATTENTION!
Il y a une risque de faire des dégâts à l'équipement si l'utilisateur ne suit pas les instructions

INFO

Indicates useful supplemental information.

Please read these instructions BEFORE installing or operating the unit to prevent personal injury or damage to the unit.

WARNING! / CAUTION!

1. **WARNING!** To reduce risk of explosion, do not install in machinery space or in area in which ignition-protected equipment is required to be used.

2 **CAUTION!** (a) To prevent damage due to excessive vibration / shock, use on marine vessels with lengths more than 65 ft. (19.8M). (b) This unit is NOT designed for weather-deck installation. To reduce risk of electrical shock, do not expose to rain or spray.

3.1 **CAUTION!** EVO™ Inverter/Charger with fully automatic charging circuit charges properly rated 12V / 24V Lead Acid Batteries. When EVO™ Inverter/Charger is in Charge Mode, Green LED marked "ON" will be blinking.

3.2 **CAUTION!** Option is available to use 12V / 24V nominal Lithium batteries. The user/installer should ensure that charging voltages, currents and profiles are programmed appropriately to meet all operating and safety requirements of the battery being used. When the EVO™ Inverter/Charger is in Charge Mode, Green LED marked "ON" will be blinking.

4. **CAUTION!** For indoors use only.

5. **WARNING!** Hot Surfaces! To prevent burns, do not touch!

6. **CAUTION!** The AC input / output wiring terminals are intended for field connection using Copper conductors that are to be sized based on 75°C. See Table 1.1 for sizing of conductors for AC INPUT circuits and Table 1.2 for sizing of conductors for AC OUTPUT circuits.

7. **WARNING!** Over current protection (AC Breakers) for the AC input / output circuits has NOT been provided for EVO-1212F-HW / 1224F-HW and has to be provided by the installer / user. See guidelines at Table 1.1 for sizing of breakers for AC INPUT circuits and Table 1.2 for sizing of breakers for AC OUTPUT circuits. National and Local Electrical Codes will supersede these guidelines.

8. **CAUTION!** The battery terminals are intended for field connection using Copper conductors that are sized based on 90°C. See Table 1.3 for recommended sizes for installation in free air and conduit respectively.

9. **WARNING!** Over current protection (fuse) for battery and External Charger circuits has NOT been provided and has to provided by the installer / user. See guidelines at Table 1.3 for recommended sizes for installation in free air and conduit respectively. National and Local Electrical Codes will supersede these guidelines.

10. Tightening torques to be applied to the wiring terminals are given in Table 1.4.

11. This unit has been provided with integral protections against overloads.

12. **WARNING!** To reduce risk of electric shock and fire:
    - Installation should be carried out by certified installer and as per Local and National Electrical Codes.
    - Do not connect to circuit operating at more than 150 Volts to Ground.
    - Do not connect to AC Load Center (Circuit Breaker Panel) having Multi-wire Branch Circuits connected .
    - Both AC and DC voltage sources are terminated inside this equipment. Each circuit must be individually disconnected before servicing.
    - Do not remove cover. No user serviceable part inside. Refer servicing to qualified servicing personnel.
    - Do not mount in zero clearance compartment.
    - Do not cover or obstruct ventilation openings.
    - Fuse(s) should be replaced with the same type and rating as of the original installed fuse(s).

13. **WARNING!** Risk of electric shock. Use only those GFCIs that are listed at Table 1.5. Other types may fail to operate properly when connected to this unit.

14. GROUNDING: The Grounding symbol shown below is used for identifying only the field wiring equipment-grounding terminal. However, this symbol is usable with the circle omitted for identifying various points within the unit that are bonded to Ground.

    Grounding Symbol / *Déf*aut à la terre

15. **WARNING!** Precautions When Working With Batteries.

Lead Acid Batteries

- Batteries contain very corrosive diluted Sulphuric Acid as electrolyte. Precautions should be taken to prevent contact with skin, eyes or clothing. Wear eye protection.
- Batteries generate Hydrogen and Oxygen during charging resulting in evolution of explosive gas mixture. Care should be taken to ventilate the battery area and follow the battery manufacturer's recommendations.
- Never smoke or allow a spark or flame near the batteries.
- Use caution to reduce the risk of dropping a metal tool on the battery. It could spark or short circuit the battery or other electrical parts and could cause an explosion. Always use insulated tools.
- Remove metal items like rings, bracelets and watches when working with batteries. Batteries can produce a short circuit current high enough to weld a ring or the like to metal and thus cause a severe burn.
- If you need to remove a battery, always remove the Ground terminal from the battery first. Make sure that all the accessories are off so that you do not cause a spark.

Lithium Batteries

- Ensure that voltage, current and charging profile settings of the charger are correct
- Ensure that the Battery Management System (BMS) of the battery is able to provide contact closure to the EVO™ Inverter/Charger under conditions of (i) over voltage / over heating (to stop charging) and (ii) deep discharge (to stop inverting).

TABLE 1.1 SIZING OF AC INPUT WIRING AND BREAKERS (Refer to Table 3.2 for more details)

Model No. (Rated Output Power in Inverter Mode) (Column 1)	Rated AC Pass Through Current (Column 2)	Maximum AC Side Charging Current (Column 3)	Maximum AC Input Current Limit (Parameter "GRID MAX CURRENT") (Column 4)	NEC Ampacity = 125% of Column 4 (Column 5)	Conductor Size Based on NEC Ampacity at Column 5 (Column 6)	Size of Breaker Based on Column 4 (Column 7)
EVO-1212F (1200VA)	10A	11.2A	20A	25A	AWG# 12	20A
EVO-1212F-HW (1200VA)	10A	11.2A	20A	25A	AWG# 12	20A
EVO-1224F (1200VA)	10A	11.2A	20A	25A	AWG# 12	20A
EVO-1224F-HW (1200VA)	10A	11.2A	20A	25A	AWG# 12	20A

Table 1.2 AC OUTPUT WIRING AND BREAKERS (Refer to Table 3.3 for more details)

Model No. (Rated Power in Inverter Mode) (Column 1)	Rated AC Output Current in Inverter Mode (Column 2)	NEC Ampacity = 125% of Column 2 (Column 3)	Wire Size based on NEC Ampacity at Column 3 and 75°C Copper Conductor in Conduit (Column 4)	Breaker Size (Based on NEC Ampacity at Column 3) (Column 5)
EVO-1212F (1200VA)	10A	12.5A	AWG# 14	15A
EVO-1212F-HW (1200VA)	10A	12.5A	AWG# 14	15A
EVO-1224F (1200VA)	10A	12.5A	AWG# 14	15A
EVO-1224F-HW (1200VA)	10A	12.5A	AWG# 14	15A

TABLE 1.3 SIZING OF BATTERY SIDE CABLES AND EXTERNAL BATTERY SIDE FUSES (Refer to Table 3.1 for more details)

Model No. (Column 1)	Rated Continuous DC Input Current (Column 2)	NEC Ampacity = 125% of Rated DC Input Current at Column 2 (Column 3)	90°C Copper Conductor. Size Based on NEC Ampacity at Column (3) or 2%Voltage Drop, whichever is Thicker				External Fuse Based on NEC Ampacity at Column (3) (Column 9)
			Cable Running Distance between the Unit and the Battery (Cable Routing In Free Air)		Cable Running Distance between the Unit and the Battery (Cable Routing In Raceway)		
			Up to 5 ft. (Column 5)	Up to 10 ft. (Column 6)	Up to 5 ft. (Column 7)	Up to 10 ft. (Column 8)	
EVO-1212F EVO-1212F-HW	152	190	AWG# 2	AWG# 2/0	AWG# 2/0	AWG# 2/0	200A
EVO-1224F EVO-1224F-HW	76	95	AWG# 6	AWG# 4	AWG# 3	AWG# 3	100A
External Charger	50A	63A	AWG# 6 (2% voltage drop is thicker)	AWG# 2 (2% voltage drop is thicker)	AWG# 6	AWG# 2 (2% voltage drop is thicker)	70A

TABLE 1.4 TIGHTENING TORQUES

Battery Input Connectors	External Charger Input Connectors	AC Input and Output Connectors
70 kgf.cm (5.0 lbf.ft)	35 kgf.cm (2.5 lbf.ft)	7 to 12 kgf.cm (0.5 to 0.9 lbf.ft)

TABLE 1.5 USE OF SPECIFIED GROUND FAULT CIRCUIT INTERRUPTER (GFCI) FOR DISTRIBUTION OF AC OUTPUT POWER IN RECREATION VEHICLES

Manufacturer of GFCI	Manufacturers' Model No.	Description
Jiaxing Shouxin Electric Technology Co. Ltd	TS-15, TS-20	NEMA5-20, Duplex, 20A NEMA5-15, Duplex, 15A

MISE EN GARDE!

1. *MISE EN GARDE! Pour réduire les risques d'explosion, ne pas installer dans les locaux de machines ou dans la zone où l'équipement protégé contre les incendies doit être utilisé.*

2. *ATTENTION! Cet appareil est conçu pour une installation PAS Météo-pont. Pour réduire les risques de choc électrique, ne pas exposer à la pluie ou à la neige.*

3.1 *ATTENTION! L'onduleur / chargeur EVO™ avec circuit de charge entièrement automatique charge des batteries au plomb 12V / 24V correctement dimensionnées. Lorsque l'onduleur / chargeur EVO™ est en mode de charge, la DEL verte marquée «ON» clignote.*

3.2 *ATTENTION! L'option est disponible pour utiliser des batteries au lithium de 12V / 24V. L'utilisateur / installateur doit s'assurer que les tensions de charge, les courants et les profils sont programmés de façon appropriée pour répondre à toutes les exigences de fonctionnement et de sécurité de la batterie utilisée. L'onduleur / chargeur EVO™ est alors en mode de charge, le voyant vert marqué "ON" clignote.*

4. *ATTENTION! Pour éviter les dommages dus à des vibrations excessives / choc, ne pas utiliser sur les navires plus petits avec des longueurs de moins de 65 pi. (19,8).*

5. *MISE EN GARDE! Surfaces chaudes! Pour éviter les brûlures, ne touchez pas.*

6. *ATTENTION! Les bornes de câblage entrée / sortie CA sont prévus pour un raccordement sur le terrain avec des conducteurs de cuivre qui doivent être dimensionnés en fonction de 75 ° C. Voir le tableau 1.1 et pour le dimensionnement des conducteurs pour les circuits d'entrée CA et le tableau 1.2 pour le dimensionnement des conducteurs pour les circuits de sortie AC.*

7. *MISE EN GARDE! Protection contre les surintensités (AC Les disjoncteurs) pour l'AC circuits d'entrée / de sortie n'a pas été fournie pour EVO-1212F-HW / 1224F-HW et doit être fournie par l'installateur/utilisateur. Voir les lignes directrices à tableau 1.1 pour le dimensionnement des disjoncteurs pour les circuits d'entrée CA et le tableau 1.2 pour le dimensionnement des disjoncteurs pour les circuits de sortie AC. Codes électriques nationaux et locaux remplaceront ces lignes directrices.*

8. *ATTENTION! Les bornes de la batterie sont destinés pour le champ Connexion à l'aide de conducteurs de cuivre qui sont dimensionnés en fonction de 90°C. Voir les tableau 1.3 pour les tailles recommandées pour l'installation à l'air libre et conduit respectivement.*

9. *MISE EN GARDE! Protection contre les surintensités (fusible) pour la batterie et les circuits chargeur externe n'a pas été fournis et a fourni à l'installateur / utilisateur. Voir les lignes directrices à tableau 1.3 pour les tailles recommandées pour l'installation à l'air libre et conduit respectivement. Codes électriques nationaux et locaux remplaceront ces lignes directrices.*

10. *Couples de serrage pour être appliqués sur les bornes de câblage sont donnés dans le tableau 1.4.*

11. *Cet appareil a été fourni avec des protections intégrées contre les surcharges.*

12. *MISE EN GARDE! Pour réduire les risques de choc électrique et d'incendie:*
    - *L'installation doit être effectuée par un installateur certifié et selon les codes électriques locaux et nationaux*
    - *Ne pas se connecter au circuit fonctionnant à plus de 150 volts à la terre*
    - *Ne pas se connecter au Centre de charge AC (Circuit de panneau de disjoncteurs) ayant Direction Multi-fil circuits reliés*
    - *Les deux sources de tension AC et DC sont terminées à l'intérieur de cet équipement. Chaque circuit doit être déconnecté individuellement avant l'entretien*
    - *Ne pas retirer le couvercle. Aucune partie réparable par l'utilisateur à l'intérieur. Faites appel à un installateur qualifié*
    - *Ne pas monter dans zéro compartiment de jeu*
    - *Ne pas couvrir ou obstruer les ouvertures de ventilation.*
    - *Fusible (s) doit être remplacé par le même type de fusible du fusible installé d'origine (s)*

13. *MISE EN GARDE! Risque de choc électrique. Utilisez uniquement les GFCIs suivantes. D'autres types peuvent ne pas fonctionner correctement lorsqu'il est connecté à cet appareil.*
14. *MISE À LA TERRE: Le symbole de mise à la terre ci-dessous est utilisé pour identifier uniquement l'équipement*

terminal de terre-câblage. Toutefois, ce symbole est utilisable avec le cercle omis pour identifier divers points de l'unité qui sont liés à la masse.

Grounding Symbol / Défaut à la terre

15. *MISE EN GARDE! Précautions lorsque vous travaillez avec des piles.*
    Batteries au plomb
    Les piles contiennent très corrosif acide sulfurique dilué comme électrolyte. Des précautions doivent être prises pour empêcher tout contact avec la peau, les yeux ou les vêtements. Porter des lunettes de protection.
    Batterie au lithium
    S'assurer que la tension, le courant et les paramètres de profil de charge le chargeur sont conformes à ce que le système de gestion de la batterie (BMS) de la batterie est en mesure de fournir de la fermeture du contact à l'EVO™ onduleur/chargeur dans des conditions de (i) surtension / plus de chauffage (d'arrêter le chargement) et (ii) une décharge profonde (pour arrêter l'inversion).
    - *Les batteries produisent de l'hydrogène et de l'oxygène lors de la charge résultant de l'évolution du mélange de gaz explosif. Il faut prendre soin de ventiler la zone de la batterie et de suivre les recommandations du fabricant de la batterie.*
    - *Ne jamais fumer ou permettre une étincelle ou une flamme près des batteries.*
    - *Faites preuve de prudence afin de réduire le risque de chute d'un outil métallique sur la batterie. Il pourrait provoquer un court-circuit ou la batterie ou d'autres pièces électriques et pourrait causer une explosion. Toujours utiliser des outils isolés*
    - *Retirez les articles métalliques tels que des bagues, des bracelets et des montres lorsque vous travaillez avec des batteries. Les batteries peuvent produire un court-circuit suffisamment élevé pour souder une bague ou autre métal et ainsi causer de graves brûlures.*
    - *Si vous devez retirer la batterie, retirez toujours la borne de terre de la batterie. Assurez-vous que tous les accessoires sont hors de sorte que vous ne causent pas une étincelle.*

1.2 DEFINITIONS

The following definitions are used in this manual for explaining various electrical concepts, specifications and operations:

Peak Value: It is the maximum value of electrical parameter like voltage / current.

RMS (Root Mean Square) Value: It is a statistical average value of a quantity that varies in value with respect to time. For example, a pure sine wave that alternates between peak values of Positive 169.68V and Negative 169.68V has an RMS value of 120 VAC. Also, for a pure sine wave, the RMS value = Peak value ÷ 1.414.

Voltage (V), Volts: It is denoted by "V" and the unit is "Volts". It is the electrical force that drives electrical current (I) when connected to a load. It can be DC (Direct Current – flow in one direction only) or AC (Alternating Current – direction of flow changes periodically). The AC value shown in the specifications is the RMS (Root Mean Square) value.

Current (I), Amps, A: It is denoted by "I" and the unit is Amperes – shown as "A". It is the flow of electrons through a conductor when a voltage (V) is applied across it.

Frequency (F), Hz: It is a measure of the number of occurrences of a repeating event per unit time. For example, cycles per second (or Hertz) in a sinusoidal voltage.

Efficiency, (η): This is the ratio of Power Output ÷ Power Input.

Phase Angle, (φ): It is denoted by "φ" and specifies the angle in degrees by which the current

vector leads or lags the voltage vector in a sinusoidal voltage. In a purely inductive load, the current vector lags the voltage vector by Phase Angle (φ) = 90°. In a purely capacitive load, the current vector leads the voltage vector by Phase Angle, (φ) = 90°. In a purely resistive load, the current vector is in phase with the voltage vector and hence, the Phase Angle, (φ) = 0°. In a load consisting of a combination of resistances, inductances and capacitances, the Phase Angle (φ) of the net current vector will be > 0° < 90° and may lag or lead the voltage vector.

Resistance (R), Ohm, Ω: It is the property of a conductor that opposes the flow of current when a voltage is applied across it. In a resistance, the current is in phase with the voltage. It is denoted by "R" and its unit is "Ohm" - also denoted as "Ω".

Inductive Reactance (X_L), Capacitive Reactance (X_C) and Reactance (X): Reactance is the opposition of a circuit element to a change of electric current or voltage due to that element's inductance or capacitance. Inductive Reactance ($\mathbf{X_L}$) is the property of a coil of wire in resisting any change of electric current through the coil. It is proportional to frequency and inductance and causes the current vector to lag the voltage vector by Phase Angle (φ) = 90°. Capacitive reactance ($\mathbf{X_C}$) is the property of capacitive elements to oppose changes in voltage. $\mathbf{X_C}$ is inversely proportional to the frequency and capacitance and causes the current vector to lead the voltage vector by Phase Angle (φ) = 90°. The unit of both $\mathbf{X_L}$ and $\mathbf{X_C}$ is "Ohm" - also denoted as "Ω". The effects of inductive reactance $\mathbf{X_L}$ to cause the current to lag the voltage by 90° and that of the capacitive reactance $\mathbf{X_C}$ to cause the current to lead the voltage by 90° are exactly opposite and the net effect is a tendency to cancel each other. Hence, in a circuit containing both inductances and capacitances, the net **Reactance (X)** will be equal to the difference between the values of the inductive and capacitive reactances. The net **Reactance (X)** will be inductive if $\mathbf{X_L} > \mathbf{X_C}$ and capacitive if $\mathbf{X_C} > \mathbf{X_L}$.

Impedance, Z: It is the vectorial sum of Resistance and Reactance vectors in a circuit.

Active Power (P), Watts: It is denoted as "**P**" and the unit is "**Watt**". It is the power that is consumed in the resistive elements of the load. A load will require additional Reactive Power for powering the inductive and capacitive elements. The effective power required would be the Apparent Power that is a vectorial sum of the Active and Reactive Powers.

Reactive Power (Q), VAR: Is denoted as "**Q**" and the unit is **VAR**. Over a cycle, this power is alternatively stored and returned by the inductive and capacitive elements of the load. It is not consumed by the inductive and capacitive elements in the load but a certain value travels from the AC source to these elements in the (+) half cycle of the sinusoidal voltage (Positive value) and the same value is returned back to the AC source in the (-) half cycle of the sinusoidal voltage (Negative value). Hence, when averaged over a span of one cycle, the net value of this power is 0. However, on an instantaneous basis, this power has to be provided by the AC source. *Hence, the inverter, AC wiring and over current protection devices have to be sized based on the combined effect of the Active and Reactive Powers that is called the Apparent Power.*

Apparent Power (S), VA: This power, denoted by "S", is the vectorial sum of the Active Power in Watts and the Reactive Power in "VAR". In magnitude, it is equal to the RMS value of voltage "V" X the RMS value of current "A". The Unit is VA. *Please note that Apparent Power VA is more than the Active Power in Watts. Hence, the inverter, AC wiring and over current protection devices have to be sized based on the Apparent Power.*

Maximum Continuous Running AC Power Rating: This rating may be specified as "Active Power" in Watts (W) or "Apparent Power" in Volt Amps (VA). It is normally specified in "Active Power (P)" in Watts for Resistive type of loads that have Power Factor =1. Reactive types of loads will draw higher value of "Apparent Power" that is the sum of "Active and Reactive Powers". Thus, AC power source should be sized based on the higher "Apparent Power" Rating in (VA) for all Reactive Types of AC loads. If the AC power source is sized based on the lower "Active Power" Rating in Watts (W), the AC power source may be subjected to overload conditions when powering Reactive Type of loads.

Starting Surge Power Rating: Certain loads require considerably higher Starting Surge Power for short duration (lasting from tens of millisecs to few seconds) as compared to their Maximum Continuous Running Power Rating. Some examples of such loads are given below:

- **Electric Motors:** At the moment when an electric motor is powered ON, the rotor is stationary (equivalent to being "Locked"), there is no "Back EMF" and the windings draw a very heavy starting current (Amperes) called "Locked Rotor Amperes" (LRA) due to low DC resistance of the windings. For example, in motor driven loads like Air-conditioning and Refrigeration Compressors and in Well Pumps (using Pressure Tank), LRA may be as high as 10 times its rated Full Load Amps (FLA) / Maximum Continuous Running Power Rating. The value and duration of LRA of the motor depends upon the winding design of the motor and the inertia / resistance to movement of mechanical load being driven by the motor. As the motor speed rises to its rated RPM, "Back EMF" proportional to the RPM is generated in the windings and the current draw reduces proportionately till it draws the running FLA / Maximum Continuous Running Power Rating at the rated RPM.
- **Transformers (e.g. Isolation Transformers, Step-up / Step-down Transformers, Power Transformer in Microwave Oven etc.):** At the moment when AC power is supplied to a transformer, the transformer draws very heavy "Magnetization Inrush Current" for a few millisecs that can reach up to 10 times the Maximum Continuous Rating of the Transformer.
- **Devices like Infrared Quartz Halogen Heaters (also used in Laser Printers) / Quartz Halogen Lights / Incandescent Light Bulbs using Tungsten heating elements:** Tungsten has a very high Positive Temperature Coefficient of Resistance i.e. it has lower resistance when cold and higher resistance when hot. As Tungsten heating element will be cold at the time of powering ON, its resistance will be low and hence, the device will draw very heavy Starting Surge Current with consequent very heavy Starting Surge Power with a value of up to 8 times the Maximum Continuous Running AC Power.
- **AC to DC Switched Mode Power Supplies (SMPS):** This type of power supply is used as stand-alone power supply or as front end in all electronic devices powered from Utility / Grid e.g. in audio/video/ computing devices and battery chargers (Please see Section 4 for more details on SMPS). When this power supply is switched ON, its internal input side capacitors start charging resulting in very high Inrush Current for a few millisecs (Please see Fig 4.1). This inrush current / power may reach up to 15 times the Continuous Maximum Running Power Rating. The inrush current / power will, however, be limited by the Starting Surge Power Rating of the AC source.

Power Factor, (PF): It is denoted by "PF" and is equal to the ratio of the Active Power (P) in Watts to the Apparent Power (S) in VA. The maximum value is 1 for resistive types of loads where the Active Power (P) in Watts = the Apparent Power (S) in VA. It is 0 for purely inductive or purely capacitive loads. Practically, the loads will be a combination of resistive, inductive and capacitive elements and hence, its value will be > 0 <1. Normally it ranges from 0.5 to 0.8.

Load: Electrical appliance or device to which an electrical voltage is fed.

Linear Load: A load that draws sinusoidal current when a sinusoidal voltage is fed to it. Examples are, incandescent lamp, heater, electric motor, etc.

Non-Linear Load: A load that does not draw a sinusoidal current when a sinusoidal voltage is fed to it. For example, non-power factor corrected Switched Mode Power Supplies (SMPS) used in computers, audio video equipment, battery chargers, etc.

Resistive Load: A device or appliance that consists of pure resistance (like filament lamps, cook tops, toaster, coffee maker etc.) and draws only Active Power (Watts) from the inverter. The inverter can be sized based on the Active Power rating (Watts) of the Resistive Load without creating overload (except for resistive loads with Tungsten based heating element like filament lamps, Quartz/Halogen lamps and Quartz / Halogen Infrared heaters. These require higher starting surge power due to lower resistance value when the heating elements are cold).

Reactive Load: A device or appliance that consists of a combination of resistive, inductive and capacitive elements (like motor driven tools, refrigeration compressors, microwaves, computers, audio/ video etc.). The Power Factor (PF) of this type of load is < 1 e.g. AC Motors (PF = 0.4 to 0.8), AC to DC Switch Mode Power Supplies (PF = 0.5 to 0.6), Transformers (PF = 0.8) etc. These devices require Apparent Power (VA) from the inverter to operate. The Apparent Power is a vectorial sum of Active Power (Watts) and Reactive Power (VAR). *The inverter has to be sized based on the higher Apparent Power (VA) and also based on the Starting Surge Power.*

1.3 GENERAL INFORMATION - INVERTER RELATED

General information related to operation and sizing of inverters is given in succeeding sub-sections.

1.3.1 AC Voltage Waveforms

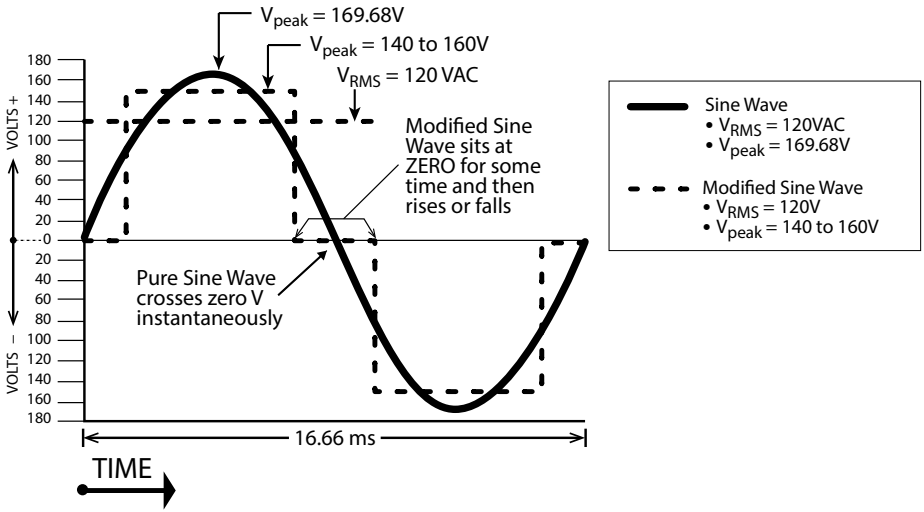

Fig 1.1 Pure and Modified Sine Waveforms for 120V, 60 Hz

The 120V output waveform of the Evolution™ series inverters is a Pure Sine Wave like the waveform of Utility / Grid power. Please see Sine Waveform represented in the Fig. 1.1 that also shows equivalent Modified Waveform for comparison.

In a Sine Wave, the voltage rises and falls smoothly with a smoothly changing phase angle and also changes its polarity instantly when it crosses 0 Volts. In a Modified Sine Wave, the voltage rises and falls abruptly, the phase angle also changes abruptly and it sits at 0V for some time before changing its polarity. Thus, any device that uses a control circuitry that senses the phase (for voltage / speed control) or instantaneous zero voltage crossing (for timing control) will not work properly from a voltage that has a Modified Sine Waveform.

Also, as the Modified Sine Wave is a form of Square Wave, it is comprised of multiple Sine Waves of odd harmonics (multiples) of the fundamental frequency of the Modified Sine Wave. For example, a 60 Hz Modified Sine Wave will consist of Sine Waves with odd harmonic frequencies of 3rd (180 Hz), 5th (300 Hz), 7th (420 Hz) and so on. The high frequency harmonic content in a Modified Sine Wave produces enhanced radio interference, higher heating effect in inductive loads like microwaves and motor driven devices like hand tools, refrigeration / air-conditioning compressors, pumps etc. The higher frequency harmonics also produce overloading effect in low frequency capacitors due to lowering of their capacitive reactance by the higher harmonic frequencies. These capacitors are used in ballasts for fluorescent lighting for Power Factor improvement and in single-phase induction motors as start and run capacitors. Thus, Modified and Square Wave Inverters may shut down due to overload when powering these devices.

1.3.2 Advantages of Pure Sine Wave Inverters

- The output waveform is a Sine Wave with very low harmonic distortion and cleaner power like Grid / Utility supplied electricity.
- Inductive loads like microwaves, motors, transformers etc. run faster, quieter and cooler.
- More suitable for powering fluorescent lighting fixtures containing Power Factor Improvement Capacitors and single phase motors containing Start and Run Capacitors.
- Reduces audible and electrical noise in fans, fluorescent lights, audio amplifiers, TV, fax and answering machines.
- Does not contribute to the possibility of crashes in computers, weird print outs and glitches in monitors.

Some examples of devices that may not work properly with Modified Sine Wave and may also get damaged are given below:

- Laser printers, photocopiers, and magneto-optical hard drives.
- Built-in clocks in devices such as clock radios, alarm clocks, coffee makers, bread-makers, VCR, microwave ovens etc. may not keep time correctly.
- Output voltage control devices like dimmers, ceiling fan / motor speed control may not work properly (dimming / speed control may not function).
- Sewing machines with speed / microprocessor control.
- Transformer-less capacitive input powered devices like (i) Razors, flashlights, night-lights, smoke detectors etc. (ii) Some re-chargers for battery packs used in hand power tools. *These may get damaged. Please check with the manufacturer of these types of devices for suitability.*

- Devices that use radio frequency signals carried by the AC distribution wiring.
- Some new furnaces with microprocessor control / Oil burner primary controls.
- High intensity discharge (HID) lamps like Metal Halide lamps. *These may get damaged. Please check with the manufacturer of these types of devices for suitability.*
- Some fluorescent lamps / light fixtures that have Power Factor Correction Capacitors. *The inverter may shut down indicating overload.*
- Induction Cooktops.

1.3.3 Power Rating of Inverters

INFO

For proper understanding of explanations given below, please refer to definitions of Active / Reactive / Apparent / Continuous / Surge Powers, Power Factor, and Resistive / Reactive Loads at Section 1.2 under "DEFINITIONS"

The power rating of inverters is specified as follows:

- Maximum Continuous Running Power Rating
- Starting Surge Power Rating

Please read details of the above two types of power ratings in Section 1.2 under "DEFINITIONS"

INFO

The manufacturers' specification for power rating of AC appliances and devices indicates only the Maximum Continuous Running Power Rating. The Starting Surge Power required by some specific types of devices as explained above has to be determined by actual testing or by checking with the manufacturer. This may not be possible in all cases and hence, can be guessed at best, based on some general Rules of Thumb.

Table 1.6 provides a list of some common AC appliances / devices that require high Starting Surge Power. An "Inverter Sizing Factor" has been recommended against each which is a Multiplication Factor to be applied to the Maximum Continuous Running Power Rating (Active Power Rating in Watts) of the AC appliance / device to arrive at the Maximum Continuous Running Power Rating of the inverter (Multiply the Maximum Continuous Running Power Rating (Active Power Rating in Watts) of the appliance / device by recommended Sizing Factor to arrive at the Maximum Continuous Running Power Rating of the inverter.

TABLE 1.6 INVERTER SIZING FACTOR	
Type of Device or Appliance	**Inverter Sizing Factor (See Note 1)**
Air Conditioner / Refrigerator / Freezer (Compressor based)	5
Air Compressor	4
Sump Pump / Well Pump / Submersible Pump	3
Dishwasher / Clothes Washer	3
Microwave (where rated output power is the Cooking Power)	2
Furnace Fan	3
Industrial Motor	3
Portable Kerosene / Diesel Fuel Heater	3
Circular Saw / Bench Grinder	3
Incandescent / Halogen / Quartz Lamps	3
Laser Printer / Other Devices using Infrared, Quartz Halogen Heaters	4
Switch Mode Power Supplies (SMPS): no Power Factor correction	2
Photographic Strobe / Flash Lights	4 (See Note 2)

NOTES FOR TABLE 1.6:

1 Multiply the Maximum Continuous Power Rating (Active Power Rating in Watts) of the appliance / device by the recommended sizing factor to arrive at the Maximum Continuous Running Power Rating of the Inverter.

2 For photographic strobe / flash unit, the Surge Power of the inverter should be > 4 times the Watt Sec rating of photographic strobe / flash unit.

1.3.4 Electro-Magnetic Interference (EMI) and FCC Compliance

These inverters contain internal switching devices that generate conducted and radiated electromagnetic interference (EMI). The EMI is unintentional and cannot be entirely eliminated. The magnitude of EMI is, however, limited by circuit design to acceptable levels as per limits laid down in North American FCC Standard FCC Part 15(B), Class B. These limits are designed to provide reasonable protection against harmful interference when the equipment is operated *in a residential environment*. These inverters can conduct and radiate radio frequency energy and, if not installed and used in accordance with the instruction manual, may cause harmful interference to radio communications. The effects of EMI will also depend upon a number of factors external to the inverter like proximity of the inverter to the EMI receptors, types and quality of connecting wires and cables etc. EMI due to factors external to the inverter may be reduced as follows:

- Ensure that the inverter is firmly grounded to the Ground System of the building or the vehicle.
- Locate the inverter as far away from the EMI receptors like radio, audio and video devices as possible.
- Keep the DC side wires between the battery and the inverter as short as possible.
- Do NOT keep the battery wires far apart. Keep them taped together to reduce their inductance and induced voltages. This reduces ripple in the battery wires and improves performance and efficiency.

- Shield the DC side wires with metal sheathing / copper foil / braiding.
- Use coaxial shielded cable for all antenna inputs (instead of 300 ohm twin leads).
- Use high quality shielded cables to attach audio and video devices to one another.
- Limit operation of other high power loads when operating audio / video equipment.

1.3.5 Characteristics of Switch Mode Power Supplies (SMPS)

Switch Mode Power Supplies (SMPS) are extensively used to convert the incoming AC power into various voltages like 3.3V, 5V, 12V, 24V etc. that are used to power various devices and circuits used in electronic equipment like battery chargers, computers, audio and video devices, radios etc. These power supplies use large capacitors in their input section for filtration. When the power supply is first turned on, there is a very large inrush current drawn by the power supply as the input capacitors are charged (The capacitors act almost like a short circuit at the instant the power is turned on). The inrush current at turn-on is several to tens of times larger than the rated RMS input current and lasts for a few milliseconds. An example of the input voltage versus input current waveforms is given in Fig. 1.2. It will be seen that the initial input current pulse just after turn-on is > 15 times larger than the steady state RMS current. The inrush dissipates in around 2 or 3 cycles i.e. in around 33 to 50 milliseconds for 60 Hz sine wave.

Further, due to the presence of high value of input filter capacitors, the current drawn by an SMPS (With no Power Factor correction) is not sinusoidal but non-linear as shown in Fig 1.3. The steady state input current of SMPS is a train of non-linear pulses instead of a sinusoidal wave. These pulses are two to four milliseconds duration each with a very high Crest Factor of around 3. Crest Factor is defined by the following equation: **CREST FACTOR = PEAK VALUE ÷ RMS VALUE**

Many SMPS units incorporate "Inrush Current Limiting". The most common method is the NTC (Negative Temperature Coefficient) resistor. The NTC resistor has a high resistance when cold and a low resistance when hot. The NTC resistor is placed in series with the input to the power supply. The higher cold resistance limits the input current as the input capacitors charge up. The input current heats up the NTC and the resistance drops during normal operation. However, if the power supply is quickly turned OFF and back ON, the NTC resistor will be hot so its low resistance state will not prevent an inrush current event.

The inverter should, therefore, be sized adequately to withstand the high inrush current and the high Crest Factor of the current drawn by the SMPS. Normally, inverters have short duration Surge Power Rating of 2 times their Maximum Continuous Power Rating. **Hence, it is recommended that for purposes of sizing the inverter, to accommodate Crest Factor of 3, the Maximum Continuous Power Rating of the inverter should be > 2 times the Maximum Continuous Rated Power of the SMPS. For example, an SMPS rated at 100 Watts should be powered from an inverter that has Maximum Continuous Power Rating of > 200 Watts.**

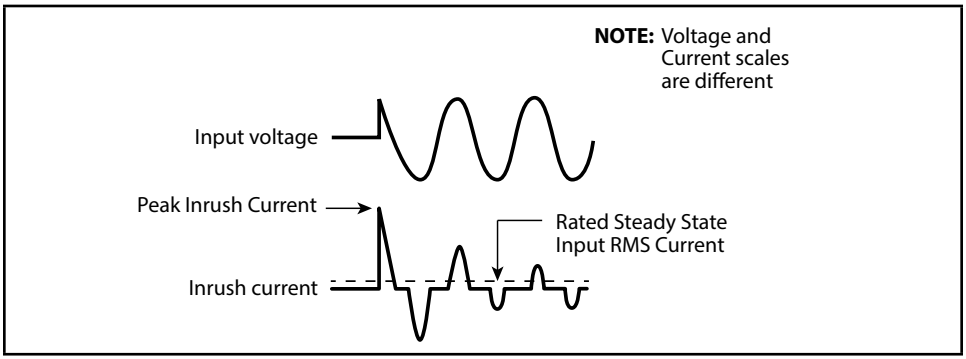

Fig 1.2 Inrush current in an SMPS

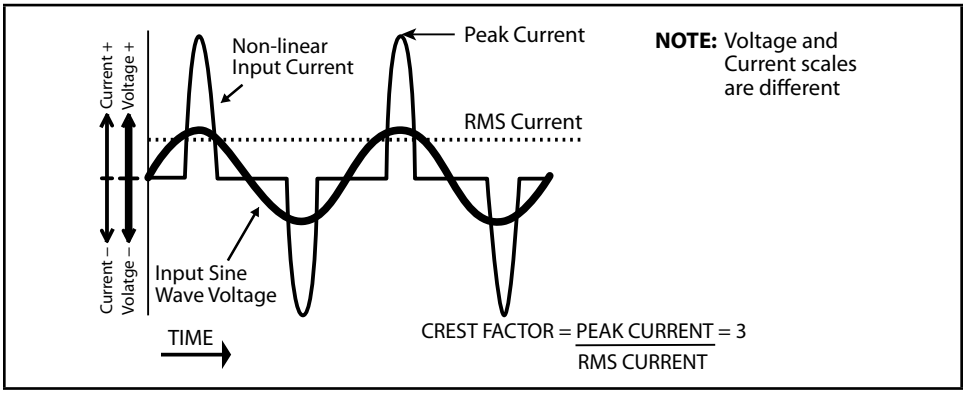

Fig 1.3 High Crest Factor of current drawn by SMPS

1.4 GENERAL INFORMATION - LEAD ACID BATTERIES

INFO

For complete background information on Lead Acid Batteries and Charging Process, visit www.samlexamerica.com>Support>White Papers>Whitepaper - Batteries, Chargers and Alternators.

Lead-acid batteries can be categorized by the type of application:

1. Automotive service - Starting/Lighting/Ignition (SLI, a.k.a. cranking), and
2. Deep cycle service.

Deep Cycle Lead Acid Batteries of appropriate capacity are recommended for powering of inverters.

1.4.1 Deep Cycle Lead Acid Batteries

Deep cycle batteries are designed with thick-plate electrodes to serve as primary power sources, to have a constant discharge rate, to have the capability to be deeply discharged to up to 80 % capacity and to repeatedly accept recharging. They are marketed for use in recreation vehicles (RV), boats and electric golf carts – so they may be referred to as RV batteries, marine batteries or golf cart batteries. Use Deep Cycle batteries for powering inverters.

1.4.2 Rated Capacity Specified in Ampere-hour (Ah)

Battery capacity "C" is specified in Ampere-hours (Ah). An Ampere is the unit of measurement for electrical current and is defined as a Coulomb of charge passing through an electrical conductor in one second. The Capacity "C" in Ah relates to the ability of the battery to provide a constant specified value of discharge current (also called "C-Rate" - see Section 1.4.5) over a specified time in hours before the battery reaches a specified discharged terminal voltage (Also called "End Point Voltage") at a specified temperature of the electrolyte. As a benchmark, the automotive battery industry rates batteries at a discharge current or C-Rate of C/20 Amperes corresponding to 20 Hour discharge period. The rated capacity "C" in Ah in this case will be the number of Amperes of current the battery can deliver for 20 Hours at 80ºF (26.7ºC) till the voltage drops to 1.75V / Cell. i.e. 10.5V for 12V battery or 21V for 24V battery. For example, a 100 Ah battery will deliver 5A for 20 Hours.

1.4.3 Rated Capacity Specified in Reserve Capacity (RC)

Battery capacity may also be expressed as Reserve Capacity (RC) in minutes typically for automotive SLI (Starting, Lighting and Ignition) batteries. It is the time in minutes a vehicle can be driven after the charging system fails. This is roughly equivalent to the conditions after the alternator fails while the vehicle is being driven at night with the headlights on. The battery alone must supply current to the headlights and the computer/ignition system. The assumed battery load is a constant discharge current of 25A.

Reserve capacity is the time in minutes for which the battery can deliver 25 Amperes at 80ºF (26.7ºC) till the voltage drops to 1.75V / Cell i.e. 10.5V for 12V battery or 21V for 24V battery.

Approximate relationship between the two units is: **Capacity "C" in Ah = Reserve Capacity in RC minutes x 0.6**

1.4.4 Typical Battery Sizes

Table 1.7 shows details of some popular battery sizes:

TABLE 1.7 POPULAR BATTERY SIZES

BCI* Group	Battery Voltage, V	Battery Capacity, Ah
27 / 31	12	105
4D	12	160
8D	12	225
GC2**	6	220

* Battery Council International; ** Golf Cart

1.4.5 Specifying Charging / Discharging Currents: C-Rate

Electrical energy is stored in a cell / battery in the form of DC power. The value of the stored energy is related to the amount of the active materials pasted on the battery plates, the surface area of the plates and the amount of electrolyte covering the plates. As explained above, the amount of stored electrical energy is also called the Capacity of the battery and is designated by the symbol "C".

The time in Hours over which the battery is discharged to the "End Point Voltage" for purposes of specifying Ah capacity depends upon the type of application. Let us denote this discharge time in hours by "T". Let us denote the rate of discharge current of the battery as a multiple of Ah capacity "C" and call it as the "C-Rate". If the battery delivers a very high discharge current, the battery will be discharged to the "End Point Voltage" in a shorter period of time. On the other hand, if the battery delivers a lower discharge current, the battery will be discharged to the "End Point Voltage" after a longer period of time. Mathematically, C-Rate is defined as:
"C-RATE" = CAPACITY "C" in Ah ÷ DISCHARGE TIME "T"

Table 1.8 gives some examples of C-Rate specifications and applications:

TABLE 1.8 DISCHARGE CURRENT RATES - "C-RATES"

Hours of discharge time "T" till the "End Point Voltage"	"C-Rate" Discharge Current in Amps = Capacity "C" in Ah ÷ Discharge Time "T" in Hrs.	Example of C-Rate Discharge Currents for 100 Ah battery
0.5 Hrs.	2C	200A
1 Hrs.	1C	100A
5 Hrs. (Inverter application)	C/5 or 0.2C	20A
8 Hrs. (UPS application)	C/8 or 0.125C	12.5A
10 Hrs. (Telecom application)	C/10 or 0.1C	10A
20 Hrs. (Automotive application)	C/20 or 0.05C	5A
100 Hrs.	C/100 or 0.01C	1A

NOTE: When a battery is discharged over a shorter time, its specified "C-Rate" will be higher. For example, the "C-Rate" at 5 Hour discharge period i.e. C/5 Amps will be 4 times higher than the "C-Rate" at 20 Hour discharge period i.e. C/20 Amps.

1.4.6 Charging / Discharging Curves

Fig. 1.4 shows the charging and discharging characteristics of a typical 12V / 24V Flooded Lead Acid battery at electrolyte temperature of 80°F / 26.7°C. The curves show the % State of Charge (X-axis) versus terminal voltage (Y-axis) during charging and discharging at different C-Rates. **Please note that X-axis shows % State of Charge. State of Discharge will be = 100% - % State of Charge**. These curves will be referred to in the subsequent explanations.

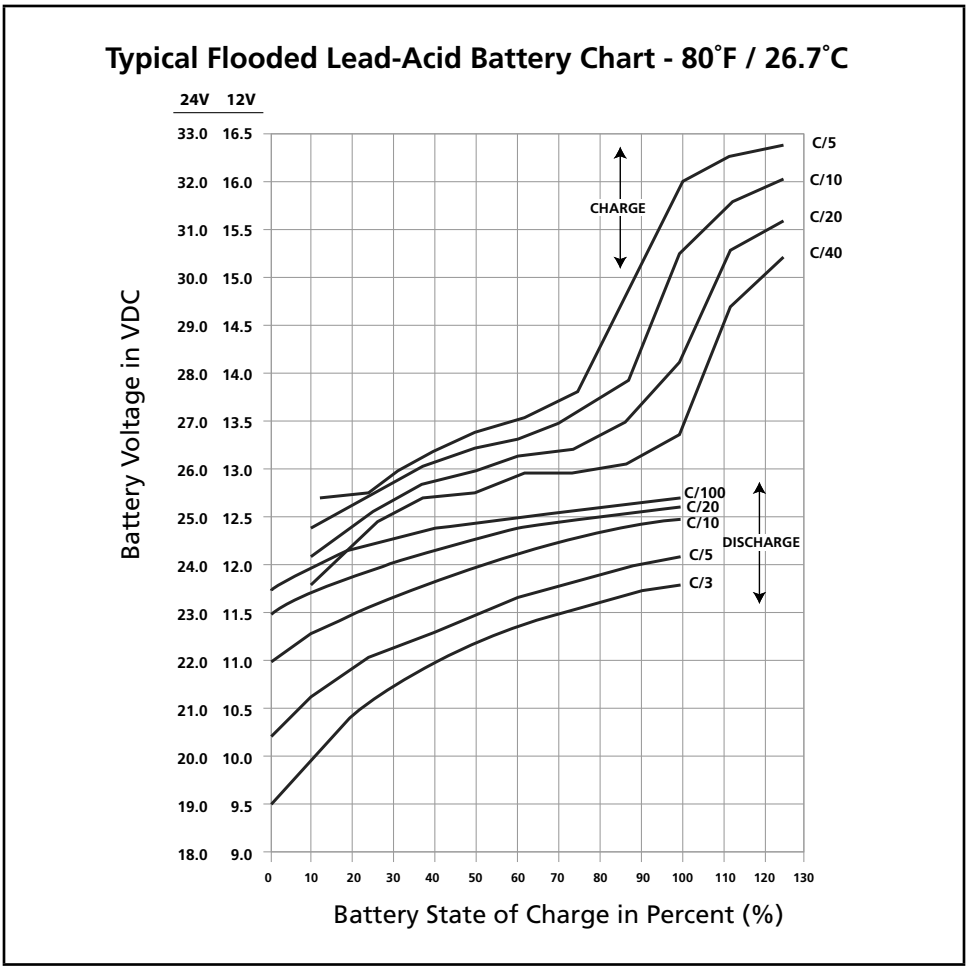

Fig 1.4 Charging / Discharging Curves for Typical Flooded Lead Acid Battery

1.4.7 Reduction in Usable Capacity at Higher Discharge Rates – Typical in Inverter Application

As stated earlier, the Ah capacity of automotive battery is normally applicable at a discharge rate of 20 Hours. As the discharge rate is increased as in cases where the inverters are driving higher capacity loads, the usable Ah capacity reduces due to "Peukert Effect". This relationship is not linear but is more or less according to the Table 1.9.

TABLE 1.9 BATTERY CAPACITY VERSUS RATE OF DISCHARGE – C-RATE	
C-Rate Discharge Current	**Usable Capacity (%)**
C/20	100%
C/10	87%
C/8	83%
C/6	75%
C/5	70%
C/3	60%
C/2	50%
1C	40%

Table 1.9 shows that a 100 Ah capacity battery will deliver 100% (i.e. full 100 Ah) capacity if it is slowly discharged over 20 Hours at the rate of 5 Amperes (50W output for a 12V inverter and 100W output for a 24V inverter). However, if it is discharged at a rate of 50 Amperes (500W output for a 12V inverter and 1000W output for a 24V inverter) then theoretically, it should provide 100 Ah ÷ 50 = 2 Hours. However, Table 1.9 above shows that for 2 Hours discharge rate, the capacity is reduced to 50% i.e. 50 Ah. Therefore, at 50 Ampere discharge rate (500W output for a 12V inverter and 1000W output for a 24V inverter) the battery will actually last for 50 Ah ÷ 50 Amperes = 1 Hour.

1.4.8 State of Charge (SOC) of a Battery – Based on "Standing Voltage"

The "Standing Voltage" of a battery under open circuit conditions (no load connected to it) can approximately indicate the State of Charge (SOC) of the battery. **The "Standing Voltage" is measured after disconnecting any charging device(s) and the battery load(s) and letting the battery "stand" idle for 3 to 8 hours before the voltage measurement is taken.** Table 1.10 shows the State of Charge versus Standing Voltage for a typical 12V/24V battery system at 80°F (26.7°C).

TABLE 1.10 SOC VERSUS STANDING VOLTAGE (TYPICAL FLOODED BATTERY)			
Percentage of Full Charge	**Standing Voltage of Individual Cells**	**Standing Voltage of 12V Battery**	**Standing Voltage of 24V Battery**
100%	2.105V	12.63V	25.26V
90%	2.10V	12.6V	25.20V
80%	2.08V	12.5V	25.00V
70%	2.05V	12.3V	24.60V
60%	2.03V	12.2V	24.40V
50%	2.02V	12.1V	24.20V
40%	2.00V	12.0V	24.00V
30%	1.97V	11.8V	23.60V
20%	1.95V	11.7V	23.40V
10%	1.93V	11.6V	23.20V
0%	= / < 1.93V	= / < 11.6V	= / < 23.20V

Check the individual cell voltages / specific gravity. If the inter-cell voltage difference is more than a 0.2V, or the specific gravity difference is 0.015 or more, the cells will require equalization. ***Please note that only non-sealed / vented / flooded / wet cell batteries are equalized. Do not equalize sealed / VRLA type of AGM or Gel Cell Batteries.***

1.4.9 State of Discharge of a Loaded Battery – Low Battery / DC Input Voltage Alarm and Shutdown in Inverters

Most inverter hardware estimate the State of Discharge of the loaded battery by measuring the voltage at the inverter's DC input terminals (considering that the DC input cables are thick enough to allow a negligible voltage drop between the battery and the inverter).

Inverters are provided with a buzzer alarm to warn that the loaded battery has been deeply discharged to around 80% of the rated capacity. ***Normally, the buzzer alarm is triggered when the voltage at the DC input terminals of the inverter has dropped to around 10.5V for a 12V battery or 21V for 24V battery at C-Rate discharge current of C/5 Amps and electrolyte temp. of 80°F.*** The inverter is shut down if the terminal voltage at C/5 discharge current falls further to 10V for 12V battery or 20V for 24V battery.

The State of Discharge of a battery is estimated based on the measured terminal voltage of the battery. The terminal voltage of the battery is dependent upon the following:

- **Temperature of the battery electrolyte:** Temperature of the electrolyte affects the electrochemical reactions inside the battery and produces a Negative Voltage Coefficient – during charging / discharging, the terminal voltage drops with rise in temperature and rises with drop in temperature
- **The amount of discharging current or "C-Rate":** A battery has non linear internal resistance and hence, as the discharge current increases, the battery terminal voltage decreases non-linearly

The discharge curves in Fig. 1.4 show the % State of Charge versus the terminal voltage of typical Flooded Lead Acid Battery under different charge /discharge currents, i.e. "C-Rates" and fixed temperature of 80°F. **(Please note that the X-Axis of the curves shows the % of State of Charge. The % of State of Discharge will be 100% - % State of Charge).**

1.4.10 Low DC Input Voltage Alarm in Inverters

As stated earlier, the buzzer alarm is triggered when the voltage at the DC input terminals of the inverter has dropped to around 10.5V for a 12V battery or 21V for 24V battery at C-Rate discharge current of C/5 Amps. Please note that the terminal voltage relative to a particular State of Discharge decreases with the rise in the value of the discharge current. For example, terminal voltages for a State of Discharge of 80% (State of Charge of 20%) for various discharge currents will be as given at Table 1.11 (Refer to Fig. 1.4 for parameters and values shown in Table 1.11):

TABLE 1.11 TERMINAL VOLTAGE AND SOC OF LOADED BATTERY				
Discharge Current: C-Rate	Terminal Voltage at 80% State of Discharge (20% SOC)		Terminal Voltage When Completely Discharged (0% SOC)	
	12V	24V	12V	24V
C/3 A	10.45V	20.9V	09.50V	19.0V
C/5 A	10.90V	21.8V	10.30V	20.6V
C/10 A	11.95V	23.9V	11.00V	22.0V
C/20 A	11.85V	23.7V	11.50V	23.0V
C/100 A	12.15V	24.3V	11.75V	23.5V

In the example given above, the 10.5V / 21.0V Low Battery / DC Input Alarm would trigger at around 80% discharged state (20% SOC) when the C-Rate discharge current is C/5 Amps. However, for lower C-Rate discharge current of C/10 Amps and lower, the battery will be almost completely discharged when the alarm is sounded. ***Hence, if the C-Rate discharge current is lower than C/5 Amps, the battery may have completely discharged by the time the Low DC Input Alarm is sounded.***

1.4.11 Low DC Input Voltage Shut-down In Inverters

As explained above, at around 80% State of Discharge of the battery at C-Rate discharge current of around C/5 Amps, the Low DC Input Voltage Alarm is sounded at around 10.5V for a 12V battery (at around 21V for 24V battery) to warn the user to disconnect the battery to prevent further draining of the battery. If the load is not disconnected at this stage, the batteries will be drained further to a lower voltage and to a completely discharged condition that is harmful for the battery and for the inverter.

Inverters are normally provided with a protection to shut down the output of the inverter if the DC voltage at the input terminals of the inverter drops below a threshold of around 10V for a 12V battery (20V for 24V battery). Referring to the Discharge Curves given in Fig 1.4, the State of Discharge for various C-Rate discharge currents for battery voltage of 10V / 20V is as follows: (Please note that the X-Axis of the curves shows the % of State of Charge. The % of State of Discharge will be 100% - % State of Charge):

- 85% State of Discharge (15% State of Charge) at very high C-rate discharge current of C/3 Amps.
- 100% State of Discharge (0 % State of Charge) at high C-Rate discharge current of C/5 Amps.
- 100% discharged (0% State of charge) at lower C-rate Discharge current of C/10 Amps.

It is seen that at DC input voltage of 10V / 20V, the battery is completely discharged for C-rate discharge current of C/5 and lower.

In view of the above, it may be seen that a fixed Low DC Input Voltage Alarm is not useful. Temperature of the battery further complicates the situation. All the above analysis is based on battery electrolyte temperature of 80°F. The battery capacity varies with temperature. Battery capacity is also a function of age and charging history. Older batteries have lower capacity because of shedding of active materials, sulfation, corrosion, increasing number of charge / discharge cycles etc. Hence, the State of Discharge of a battery under load cannot be estimated accurately. However, the low DC input voltage alarm and shut-down functions are designed to protect the inverter from excessive current drawn at the lower voltage.

1.4.12 Depth of Discharge of Battery and Battery Life

The more deeply a battery is discharged on each cycle, the shorter the battery life. Using more batteries than the minimum required will result in longer life for the battery bank. A typical cycle life chart is given in the Table 1.12 below:

TABLE 1.12 TYPICAL CYCLE LIFE CHART

Depth of Discharge % of Ah Capacity	Cycle Life of Group 27 /31	Cycle Life of Group 8D	Cycle Life of Group GC2
10	1000	1500	3800
50	320	480	1100
80	200	300	675
100	150	225	550

NOTE: It is recommended that the depth of discharge should be limited to 50%.

1.4.13 Series and Parallel Connection of Batteries

Refer to details at Section 3.4.

1.4.14 Sizing the Inverter Battery Bank

One of the most frequently asked questions is, "how long will the batteries last?" This question cannot be answered without knowing the size of the battery system and the load on the inverter. Usually this question is turned around to ask "How long do you want your load to run?", and then specific calculation can be done to determine the proper battery bank size. There are a few basic formulae and estimation rules that are used:

1. Active Power in Watts (W) = Voltage in Volts (V) x Current in Amperes (A) x Power Factor
2. For an inverter running from a 12V battery system, the approximate DC current required from the 12V batteries is the AC power delivered by the inverter to the load in Watts (W) divided by 10 & for an inverter running from a 24V battery system, the approximate DC current required from the 24V batteries is the AC power delivered by the inverter to the load in Watts (W) divided by 20.
3. Energy required from the battery = DC current to be delivered (A) x Time in Hours (H).

The first step is to estimate the total AC watts (W) of load(s) and for how long the load(s) will operate in hours (H). The AC watts are normally indicated in the electrical nameplate for each appliance or equipment. In case AC watts (W) are not indicated, Formula 1 given above may be used to calculate the AC watts. The next step is to estimate the DC current in Amperes (A) from the AC watts as per Formula 2 above. An example of this calculation for a 12V inverter is given below:

Let us say that the total AC Watts delivered by the inverter = 1000W.
Then, using Formula 2 above, the approximate DC current to be delivered by the 12V batteries = 1000W ÷10 = 100 Amperes, or by 24V batteries = 1000W ÷ 20 = 50A.

Next, the energy required by the load in Ampere Hours (Ah) is determined.
For example, if the load is to operate for 3 hours then as per Formula 3 above, the energy to be delivered by the 12V batteries = 100 Amperes × 3 Hours = 300 Ampere Hours (Ah), or by the 24V batteries = 50A x 3 Hrs = 150 Ah.

Now, the capacity of the batteries is determined based on the run time and the usable capacity.
From Table 1.9 "Battery Capacity versus Rate of Discharge", the usable capacity at 3 Hour discharge rate is 60%. Hence, the actual capacity of the 12V batteries to deliver 300 Ah will be equal to: 300 Ah ÷ 0.6 = 500 Ah, and the actual capacity of the 24V battery to deliver 150 Ah will be equal to 150 Ah ÷ 0.6 = 250 Ah.

And finally, the actual desired rated capacity of the batteries is determined based on the fact that normally only 80% of the capacity will be available with respect to the rated capacity due to non availability of ideal and optimum operating and charging conditions. So the final requirements will be equal to:

FOR 12V BATTERY: 500 Ah ÷ 0.8 = 625 Ah (note that the actual energy required by the load was 300 Ah).

FOR 24V BATTERY: 250 Ah ÷ 0.8 = 312.5 Ah (Note that the actual energy required was 150 Ah).

It will be seen from the above that the final rated capacity of the batteries is almost 2 times the energy required by the load in Ah. ***Thus, as a Rule of Thumb, the Ah capacity of the batteries should be twice the energy required by the load in Ah.***

1.14.15 Charging Batteries

Batteries can be charged by using good quality AC powered battery charger or from alternative energy sources like solar panels, wind or hydro systems. Make sure an appropriate Battery Charge Controller is used. It is recommended that batteries may be charged at 10% to 20% of their Ah capacity (Ah capacity based on 20 Hr Discharge Rate). Also, for complete charging (return of 100% capacity), it is recommended that 4-Stage Charger may be used as follows:

- **Float Application Charging (2-Stage)**
  Stage 1 (Bulk Stage at constant current) → Stage 2 (Absorption Stage at constant voltage. May also be called Float Stage in some applications).
- **Normal Charging (3-Stages)**
  Stage 1 (Bulk Stage at constant current) → Stage 2 (Absorption Stage at constant voltage) → Stage 3 (Float Stage at constant voltage)
- **Equalization Charging (4-Stages)**
  Stage 1 (Bulk Stage at constant current) → Stage 2 (Absorption Stage at constant voltage) → Stage 3 (Equalization Stage at constant voltage) → Stage 4 (Float Stage at constant voltage)

Please refer to Section 5 for details of charging algorithm used in the Battery Charger Section of EVO™ Series Inverter/Charger.

2. LAYOUT

2.1 LAYOUT OF EVO-1212F AND EVO1224F – FRONT VIEW

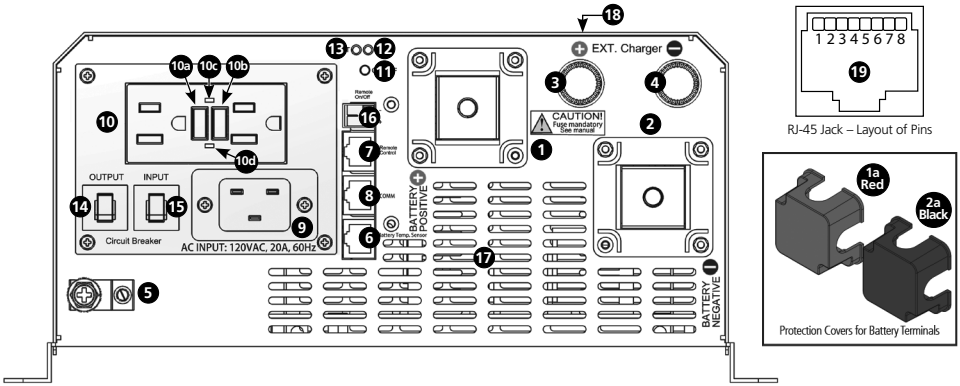

Fig 2.1 Layout of Front side EVO-1212F / EVO-1224F

LEGEND for Fig 2.1

1. Battery Positive (+) Input Connector (marked "BATTERY POSITIVE"): Stud and Nut, M8 (Pitch 1.25 mm)
   - 1a Red Protective Cover for Battery Positive (+) Input Connector – mounted using 2 pcs of M3 (Pitch 0.5 mm) x 10 mm long screws
2. Battery Negative (-) Input Connector (marked "BATTERY NEGATIVE"): Stud and Nut, M8 (Pitch 1.25)
   - 2a Black Protective Cover for Battery Negative (-) Input Connector - mounted using 2 pcs of M3 (Pitch 0.5 mm) x 10 mm long screws
3. External Charge Controller Positive (+) Input Connector (marked "+ EXT. charger"): Stud and Thumb Nut, M6 (Pitch 1 mm)
4. External Charge Controller Negative (-) Input Connector (marked "– EXT. charger"): Stud and Thumb Nut, M6 (Pitch 1 mm)
5. DC Side Ground Connector (marked "⏚") – Hole Diameter 6.5 mm for AWG #4 to #6; Set screw M6 (Pitch 0.75 mm)
6. RJ-45 Jack (marked "Battery Temp. Sensor") is used for 2 functions as follows:
   a) For input from Temperature Sensor "EVO-BCTS" for temperature compensation when Battery Type 0=Lead Acid is selected or,
   b) For input for contact closure / opening signal from the Battery Management System (BMS) to Pins 4 and 5 (see Pin layout, 19) of the Jack when Battery Type 1= Lithium is selected. When Pins 4 and 5 are shorted due to contact closure, charging will stop in "Charging" Mode and inverting will stop in "Inverting" Mode
7. RJ-45 Jack (marked "Remote Control") for "EVO-RC Plus" Remote Control
8. RJ-45 Jack (marked "COMM") - for future use.
9. Male AC Power Inlet Plug – Rating 20A (IEC60320 C-20). Will require 20A rated Female Socket Connector (IEC 60320 C-19). For convenience, the connector has been supplied with the unit (See Section 2.6 – "Contents of Package")
10. NEMA5-15R Duplex GFCI Outlets for 120 VAC output [See Section 3.6.1.2 for details].
    - 10a. Test Button
    - 10b. GFCI Reset Button
    - 10c. Red LED: GFCI Life End Alarm
    - 10d. Green LED: GFCI ON
11. ON/Off Push Button
12. Blue LED "ON"
13. Red LED "Fault"
14. AC output Breaker, 15A
15. AC Input Breaker, 20A
16. Connector (marked "Remote On/Off") for On/Off Control through external +12V signal (9 – 15V, < 10mA): Screw M2.5; Wire size AWG#30 to AWG#12
    - **CAUTION!** Observe correct polarity - Upper terminal is Negative and Lower terminal is Positive
17. Air inlet vents for 2 variable speed, temperature controlled cooling fans.
18. Removable top cover: Fixed with 8 screws – M4 (Pitch 0.7mm) x 4 mm
19. Pin No layout for RJ-45 Jack.

2.2 LAYOUT OF EVO-1212F / 1212F-HW AND EVO-1224F / 1224F-HW – BACK VIEW

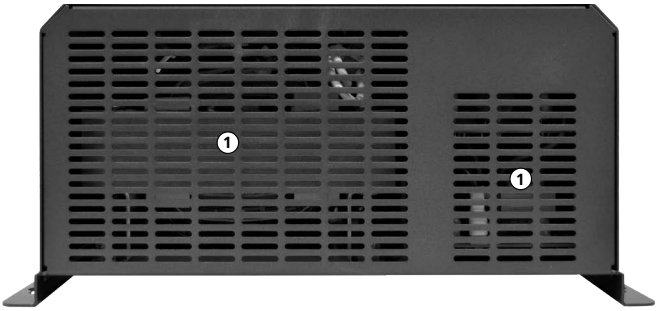

Fig 2.2 Layout of Back Side - EVO-1212F / 1212F-HW and EVO-1224F / 1224F-HW

LEGEND for Fig 2.2

1. Air outlet vents for 2 variable speed, temperature controlled cooling fans **(fans are not shown**).

2.3 LAYOUT OF EVO-1212F-HW AND EVO-1224F-HW – FRONT VIEW

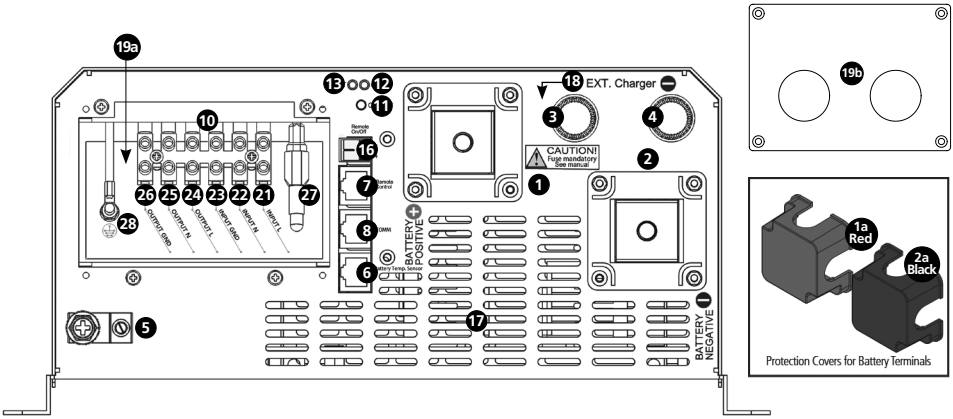

Fig 2.3 Hardwired AC Input and output connections: EVO-1212F-HW and EVO-1224F-HW

LEGEND for Fig 2.3

1. Battery Positive (+) Input Connector (marked "BATTERY POSITIVE"): Stud and Nut, M8 (Pitch 1.25mm)
   - 1a Red Protective Cover for Battery Positive (+) Input Connector – mounted using 2 pcs of M3 (Pitch 0.5mm) x 10mm long screws
2. Battery Negative (-) Input Connector (marked "BATTERY NEGATIVE"): Stud and Nut, M8 (Pitch 1.25)
   - 2a Black Protective Cover for Battery Negative (-) Input Connector - mounted using 2 pcs of M3 (Pitch 0.5mm) x 10mm long screws
3. External Charge Controller Positive (+) Input Connector (marked "+ EXT. charger"): Stud and Thumb Nut, M6 (Pitch 1mm)
4. External Charge Controller Negative (-) Input Connector (marked "– EXT. charger"): Stud and Thumb Nut, M6 (Pitch 1 mm)
5. DC Side Ground Connector (marked "⏚") – Hole Diameter 6.5mm for AWG #4 to #6; Set screw M6 (Pitch 0.75mm)
6. RJ-45 Jack (marked "Battery Temp. Sensor") is used for 2 functions as follows:
   a) For input from Temperature Sensor "EVO-BCTS" for temperature compensation when Battery Type 0=Lead Acid is selected or,
   b) For input for contact closure / opening signal from the Battery Management System (BMS) to Pins 4 and 5 of the Jack when Battery Type 1= Lithium is selected. When Pins 4 and 5 are shorted due to contact closure, charging will stop in "Charging" Mode and inverting will stop in "Inverting" Mode
7. RJ-45 Jack (marked "Remote Control") for "EVO-RC Plus" Remote Control
8. RJ-45 Jack (marked "COMM") - for future use
9. Blank
10. Blank
11. ON/Off Push Button
12. Blue LED "ON"
13. Red LED "Fault"
14. Blank
15. Blank
16. Connector (marked "Remote On/Off") for On/Off Control through external +12V signal (9 – 15V, < 10mA): Screw M2.5; Wire size AWG#30 to AWG#12
    - CAUTION! Observe correct polarity - Upper terminal is Negative and Lower terminal is Positive
17. Air inlet vents for 2 variable speed, temperature controlled cooling fans.
18. Removable top cover: Fixed with 8 screws – M4 (Pitch 0.7mm) x 4mm

19(a). Pocket with Terminal Block for hard wiring

19(b). Plate to cover Pocket 19(a). Uses 4 mounting screws M3 (Pitch 0.5mm) x 6mm long (not shown). The plate has 2 holes (27.8 mm /13/32" dia.) for ¾" Trade Size Fitting for conduit / cable entry

20. Terminal Block for AC Input and AC output Connections: Terminal Hole: 3.5 mm x 3.0 mm for up to AWG#10; Set Screw M3 (0.5mm Pitch) x 6 mm long
21. INPUT L
22. INPUT N
23. INPUT GND
24. OUTPUT L
25. OUTPUT N
26. OUTPUT GND
27. Insulated Male / Female Quick Disconnect for disconnecting Output Neutral to Chassis Ground bond in Inverter Mode (Please see Sections 4.5.1 to 4.5.3 and Fig 3.12(a) and 3.12(b)
28. AC Input and Output Ground connection to metal chassis: Stud and Nut; M4 (Pitch 0.7mm)

2.4 REMOTE CONTROL EVO-RC-PLUS

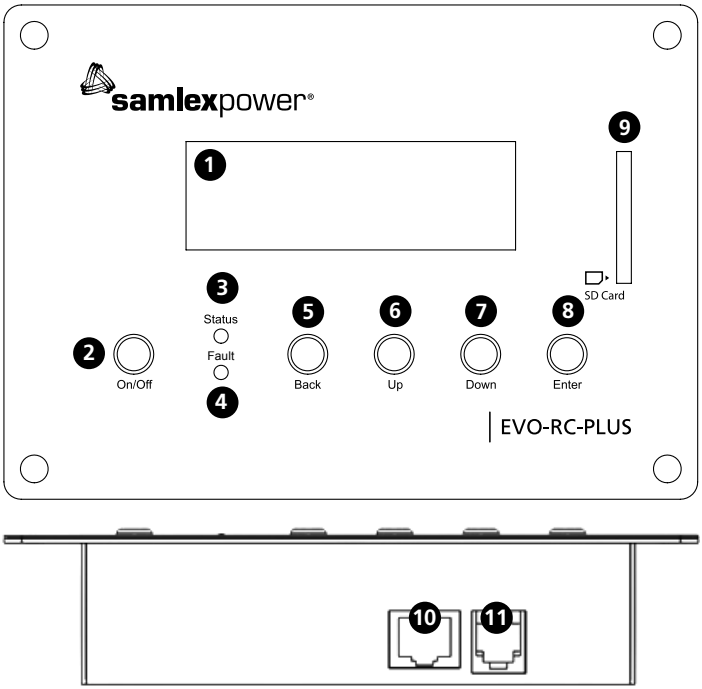

Fig 2.4(a) Optional Remote Control EVO-RC-PLUS

LEGEND for Fig 2.3

1. LCD Screen:
   - 4 rows of 20 characters each
   - Blue screen with white characters
2. ON/OFF Key
3. Blue LED "Status"
4. Red LED "Fault"
5. Navigation Key "Back"
6. Navigation Key "Up"
7. Navigation Key "Down"
8. Navigation Key "Enter"
9. SD Card Slot – FAT16/32 format, up to 16 GB
10. RJ-45 Jack
11. RJ-12 Jack
12. RJ-45 Data Cable (Straight Wired), 10 m / 33 ft [Fig 2.4(b)]

Fig 2.4(b) Cable for Remote Control

2.5 BATTERY TEMPERATURE SENSOR EVO-BCTS [FIG 2.5 (a)]

Temperature Sensor [Negative Temperature Coefficient (NTC) resistor]: Mounting hole: 10mm/0.39" suitable for 3/8" or 5/16" battery studs

1. RJ-45 Plug: Pin 4 → + NTC ; Pin 5 → – NTC
2. 5 meter/16.5 ft cable

Note: Mount the sensor on the Positive or Negative terminal stud on the battery as shown in Fig 2.5(b)

Fig 2.5(a) Temperature Sensor Model EVO-BCTS

Fig 2.5(b) Temperature Sensor Installation

2.6 CONTENTS OF PACKAGE

Inverter/Charger
Temperature Sensor EVO-BCTS [Fig 2.5(a)]
DC Terminal Covers (1a, 2a: Fig 2.1) (Fitted on the unit with 2 screws each)
Mating Connector for Remote On/Off Control (16: Fig 2.1)
IEC 60320 C-19, Socket Connector
Wire End Terminals for AC Wiring (Fig 3.11) for EVO-1212F-HW / EVO-1224-HW

Model	AWG#12 (for input wiring)	AWG #14 (for output wiring)
EVO-1212F-HW and EVO-1224-HW	4	4

Owner's Manual
Quick Start Guide

SECTION 3 | Installation

3.1 SAFETY OF INSTALLATION

WARNING!

Please ensure safety instructions given under Section 1 are strictly followed.

MISE EN GARDE!

Se il vous plaît assurer consignes de sécurité fournies à la section 1 sont strictement suivies.

3.2 OVERALL DIMENSIONS

The overall dimensions and the location of the mounting holes are shown in Fig. 3.1.

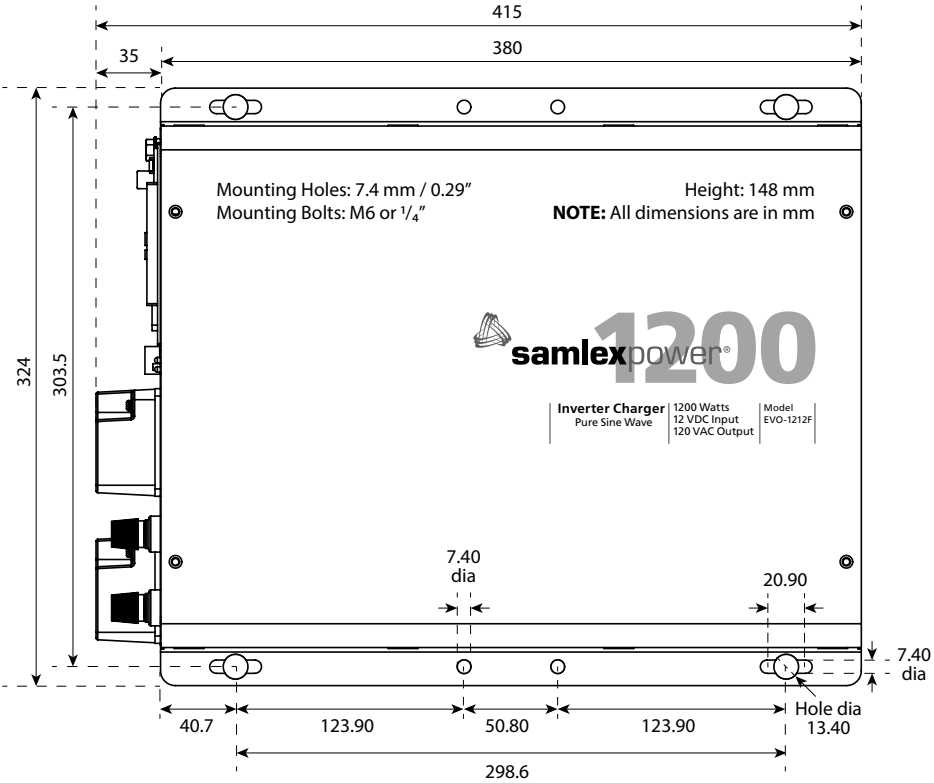

Fig. 3.1 Mounting Dimensions

3.3 MOUNTING OF THE UNIT

In order to meet the regulatory safety requirements, the mounting has to satisfy the following requirements:

- Mount on a non-combustible material
- The mounting surface should be able to support a weight of at least 60 Kg / 132 lbs. Use 4 pcs of 1/4" or M6 mounting bolts and lock washers

Cooling: The unit has openings on the front and back for cooling and ventilation. Ensure that these openings are not blocked or restricted. Install in cool, dry and well ventilated area.

CAUTION!

Ensure there is OVER 200 mm clear space surrounding the inverter for ventilation.

ATTENTION!

Assurer qu'il y a PLUS QUE 200 mm d'espace DÉGAGÉ entourant l'onduleur pour faciliter la ventilation.

Mounting Orientation:

- **Mounting Arrangement 1:**
  Mount horizontally on a horizontal surface (e.g. table top or a shelf). Please see Fig. 3.2.

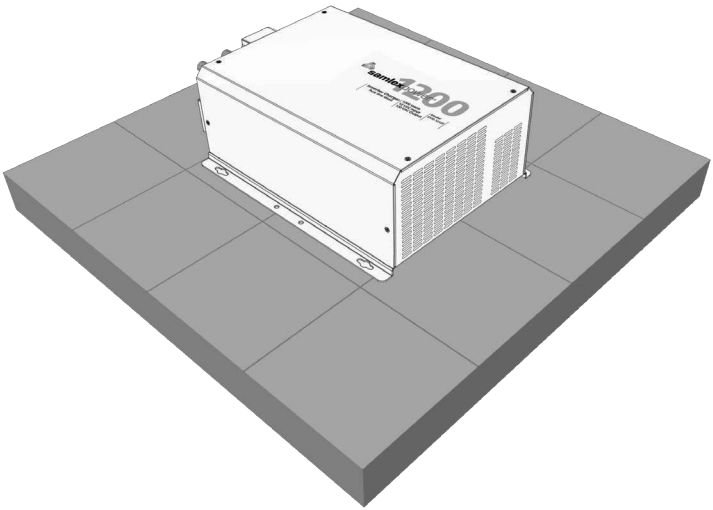

Fig 3.2 Mounting Arrangement No.1: Horizontally On Horizontal Surface

- **Mounting Arrangement No. 2:**
  Mount horizontally on a vertical surface (like a wall). Please see Fig. 3.3.

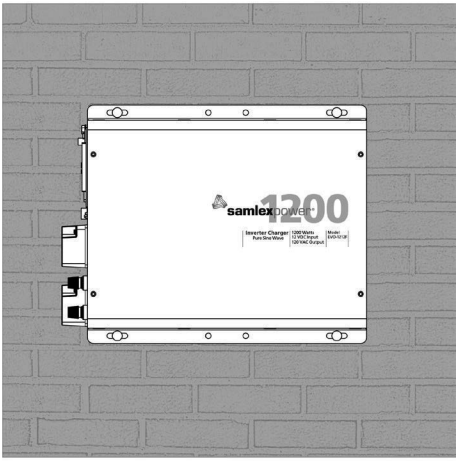

Fig 3.3 Mounting Arrangement 2: On Vertical Surface

- **Mounting Arrangement No. 3:**
  Mount vertically on a vertical surface, see Fig. 3.4. Protect against possibility of small objects or water entering the ventilation openings on the top. (If necessary, install a suitable sloping guard at least 200mm from the top surface). Also, ensure there is no combustible material directly under the unit.

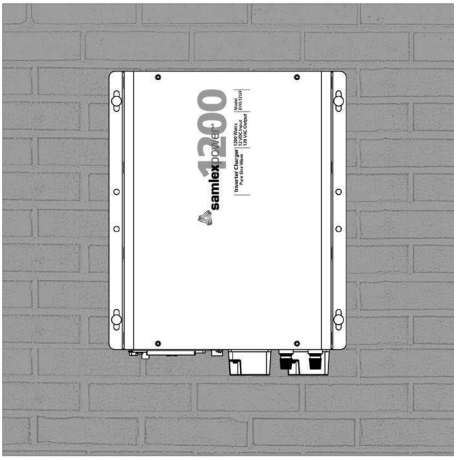

Fig 3.4 Mounting Arrangement 3: On Vertical Surface

3.4 INSTALLING BATTERIES - SERIES AND PARALLEL CONNECTION

Batteries are normally available in voltages of 2V, 6V and 12V and with different Ah capacities. A number of individual batteries can be connected in series and in parallel to form a bank of batteries with the desired increased voltage and capacity.

3.4.1 Series Connection

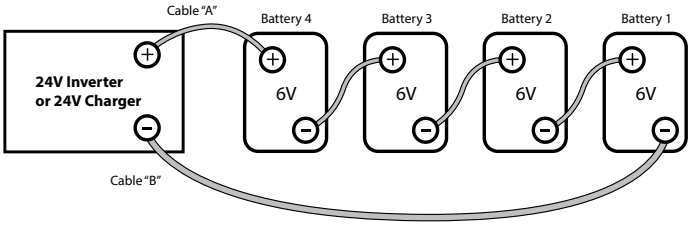

Fig 3.5 Series Connection

When two or more batteries are connected in series, their voltages add up but their Ah capacity remains the same. Fig. 3.5 shows 4 pieces of 6V, 200 Ah batteries connected in series to form a battery bank of 24V with a capacity of 200 Ah. The Positive terminal of battery 4 becomes the Positive terminal of the 24V bank. The Negative terminal of battery 4 is connected to the Positive terminal of battery 3. The Negative terminal of battery 3 is connected to the Positive terminal of battery 2. The Negative terminal of battery 2 is connected to the Positive terminal of battery 1. The Negative terminal of battery 1 becomes the Negative terminal of the 24V battery bank.

3.4.2 Parallel Connection

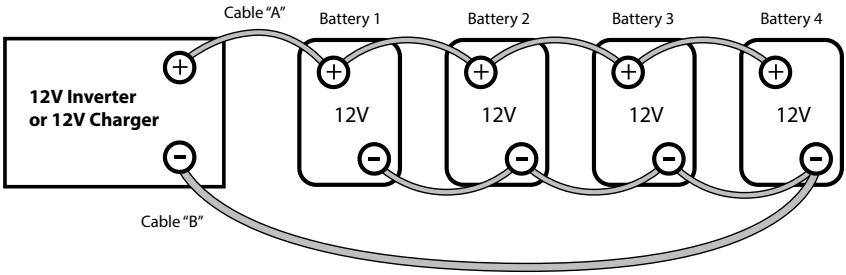

Fig 3.6 Parallel Connection

When two or more batteries are connected in parallel, their voltage remains the same but their Ah capacities add up. Fig. 3.6 above shows 4 pieces of 12V, 100 Ah batteries connected in parallel to form a battery bank of 12V with a capacity of 400 Ah. The four Positive terminals of batteries 1 to 4 are paralleled (connected together) and this common Positive connection becomes the Positive terminal of the 12V bank. Similarly, the four Negative terminals of batteries 1 to 4 are paralleled (connected together) and this common Negative connection becomes the Negative terminal of the 12V battery bank.

3.4.3 Series – Parallel Connection

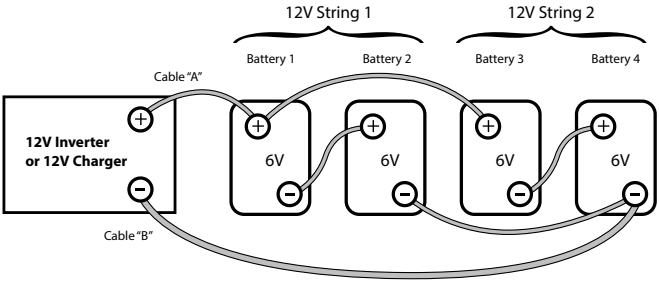

Fig. 3.7 Series-Parallel Connection

Figure 3.7 shows a series – parallel connection consisting of four 6V, 200 Ah batteries to form a 12V, 400 Ah battery bank. Two 6V, 200 Ah batteries, Batteries 1 and 2 are connected in series to form a 12V, 200 Ah battery (String 1). Similarly, two 6V, 200 Ah batteries, Batteries 3 and 4 are connected in series to form a 12V, 200 Ah battery (String 2). These two 12V, 200 Ah Strings 1 and 2 are connected in parallel to form a 12V, 400 Ah bank.

3.4.4 Wiring Order in Parallel Connection of Batteries

CAUTION!

When 2 or more batteries / battery strings are connected in parallel and are then connected to inverter/charger (See Figs 3.6 and 3.7), attention should be paid to the manner in which the inverter/charger is connected to the battery bank. Please ensure that if the Positive output cable of the inverter/charger (Cable "A") is connected to the Positive battery post of the first battery (Battery 1 in Fig 3.6) or to the Positive battery post of the first battery string (Battery 1 of String 1 in Fig. 3.7), then the Negative output cable of the inverter/charger (Cable "B") should be connected to the Negative battery post of the last battery (Battery 4 as in Fig. 3.6) or to the Negative Post of the last battery string (Battery 4 of Battery String 2 as in Fig. 3.7).
This connection ensures the following:

- The resistances of the interconnecting cables will be balanced.
- All the individual batteries / battery strings will see the same series resistance.
- All the individual batteries will charge/discharge at the same charging/discharging current and thus, will be charged/discharged to the same state at the same time.
- None of the batteries will see an overcharge/overdischarge condition.

If the Positive output cable of the inverter/charger (Cable "A") is connected to the Positive battery post of the first battery (Battery 1 in Fig. 3.6) or to the Positive battery post of the first battery string (Battery 1 of String 1 in Fig. 3.7), and the Negative output cable of the inverter/charger (Cable "B") is connected to the Negative battery post

of the first battery (Battery 1 as in Fig. 3.6) or to the Negative Post of the first battery string (Battery 1 of Battery String 1 as in Fig 3.7), the following abnormal conditions will result:

- The resistances of the connecting cables will not be balanced.
- The individual batteries will see different series resistances.
- All the individual batteries will be charged/discharged at different charging/discharging current and thus, will reach fully charged/discharged state at different times.
- The battery with lower series resistance will take shorter time to charge/discharge as compared to the battery which sees higher series resistance and hence, will experience over charging/over discharging and its life will be reduced.

ATTENTION!

Quand il y a 2 batteries/fils de batterie ou plus qui sont liés en parallèle et branché à la fois, à un chargeur (Voir Figs. 3.6 et 3.7), il faut faire attention à la manière dont le chargeur est branché à la banque de batterie. Veuillez assurer que le câble positif de sortie du chargeur de batterie (Câble A) est lié à la borne positive de la première batterie (La batterie 1 dans la Fig. 3.6) ou à la borne positive de batterie qui est liée au premier fil (Le fil 1 et la batterie 1, Fig 3.7), et puis le câble négatif de sortie du chargeur de batterie (Câble B) est lié à la borne négative de la dernière batterie (La Batterie 4 dans la Fig. 3.6) ou à la borne négative de batterie qui est liée au dernier fil (Le fil 2 et La batterie 4 dans la Fig. 3.7).
Cette connexion assure la suivante:

- *Les résistances des câbles interconnectés seront équilibrées*
- *Tous les batteries/ fils de batterie dans la série auront la même résistance*
- *Toutes les batteries individuelles vont recharger au même courant, ainsi elles seront rechargées à l'état pareille, au même temps*
- *Aucune des batteries auront une condition de surcharge.*

Si le câble positif de sortie du chargeur de batterie (Câble A) est lié à la borne positive de la première batterie (La batterie 1 dans la Fig. 3.6) ou à la borne positive de batterie qui est liée au premier fil (Le fil 1 et La Batterie 1, Fig 3.7), et puis le câble négatif de sortie du chargeur de batterie (Câble B) est lié à la borne négative de la première batterie (La batterie 1 dans la Fig. 3.6) ou à la borne négative de batterie qui est liée au premier fil (Le fil 1 de La Batterie 1 dans la Fig. 3.7), les conditions anormales résulteront:

- *Les résistances des câbles interconnectés seront pas équilibrées*
- *Tous les batteries/ fils de batterie dans la série n'auront pas la même résistance*
- *Toutes les batteries individuelles vont recharger à des courants différentes, ainsi elles atteindront un état de rechargement complèt mais en décalage.*
- *La batterie ayant le moins de résistance dans la série prendrait moins de temps pour être rechargée comparé aux autres batteries. Alors elle serait surchargée et, en conséquence aurait une vie plus courte.*

3.5 DC SIDE CONNECTIONS

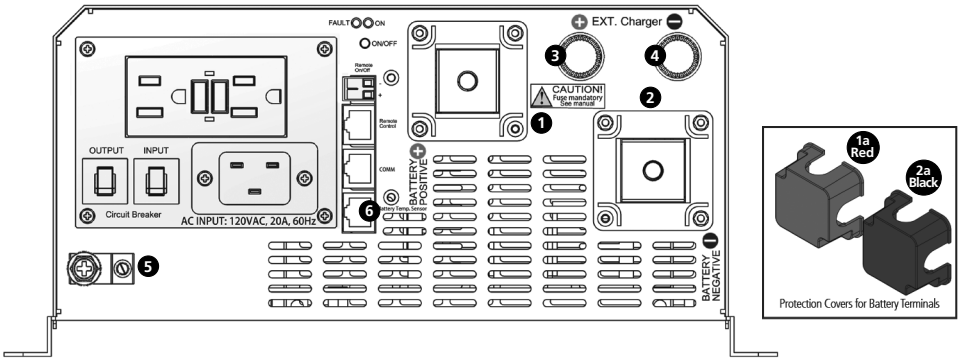

Fig 3.8 DC Side Connections

LEGEND for Fig 3.8

1. Battery Positive (+) Input Connector (marked "BATTERY POSITIVE"): Stud and Nut, M8 (Pitch 1.25 mm) (RED Protection Cover 1(a) is removed)
   1a. RED Protection Cover For Battery Positive (+) Input Connector
2. Battery Negative (-) Input Connector (marked "BATTERY NEGATIVE"): Stud and Nut, M8 (Pitch 1.25 mm) (Black Protection Cover 2(a) is removed)
   2a. Black Protection Cover for Battery Negative (-) Input Connector
3. External Charger (+) Input Connector (marked "+ EXT. charger"): Stud and Nut, M6 (Pitch 1 mm)
4. External Charger (-) Input Connector (marked "– EXT. charger"): Stud and Nut, M6 (Pitch 1 mm)
5. DC Side Grounding Connector (marked "⏚") Hole Dia 6.5 mm for up to 25 mm^2 (AWG #4). Set Screw M-8. This is internally connected to the metal chassis of the unit
6. RJ-45 Jack (marked "Battery Temp. Sensor") is used for 2 functions as follows:
   a. For input from Temperature Sensor "EVO-BCTS" for temperature compensation when Battery Type 0 = Lead Acid is selected or,
   b. For input for contact closure / opening signal from the Battery Management System (BMS) to Pins 4 and 5 of the Jack when Battery Type 1 = Lithium is selected. When pins 4 and 5 are shorted due to contact closure, charging will stop in "Charging" Mode and inverting will stop in "Inverting" Mode

The following DC side connections are required to be made (see Fig 3.8):

- Deep cycle batteries are connected to the battery input terminals (1) and (2). The terminals are provided with protective covers – RED for Positive and BLACK for Negative. Fit these covers once connections have been made. For details on sizing and charging of batteries, please refer to Section 1.4 under "General Information-Lead Acid Batteries".
- Use appropriate external fuse (Refer to Table 3.1) within 7" of battery Positive terminal.
- External charging source, if any, is connected to the connectors (3) and (4) as shown above. **The maximum capacity of the external charging source is 50A.**
- Battery Temperature Sensor EVO-BCTS is connected to the RJ-45 Jack (6). See Fig 2.5 (a) and 2.5 (b) for details.
- DC Side Grounding Connector (5) is connected to the Earth ground / vehicle chassis ground as follows using minimum AWG #6 wire size:
  (i) to the Bus Bar "G-B" of the DC Electrical Panel (Fig 3.12)
  (ii) to the Bus Bar "G-B" of the Grid Electrical Panel (Fig 3.13)
  (iii) to the RV chassis ground in RV (Figs 3.14 and 3.15)

3.5.1 Preventing DC Input Over Voltage

It is to be ensured that the DC input voltage of this unit does not exceed 17 VDC for the 12V battery version EVO-1212F / EVO-1212F-HW, and 34 VDC for the 24V battery versions EVO-1224F and EVO-1224F-HW to prevent permanent damage to the unit.

3.5.2 Preventing Reverse Polarity On The Input Side

CAUTION!

When making battery connections on the input side, make sure that the polarity of battery connections is correct (Connect the Positive of the battery to the Positive terminal of the unit and the Negative of the battery to the Negative terminal of the unit). If the input is connected in reverse polarity, external DC fuse in the input side will blow and may also cause permanent damage to the inverter.

Damage caused by reverse polarity is not covered by warranty.

ATTENTION!

Quand vous faites des connexions à la batterie du côté d'entrée, veuillez assurer que les polarités sont mise du bon côté (Lié le positif de la batterie à la borne positive de l'appareil et le négatif de la batterie à la borne négative de l'appareil. Si les polarité de l'entrée sont mise à l'envers, le fusible CC externe du côté d'entrée va s'exploser et peut causer des dégâts permanent à l'onduleur.

Des dégats causés par un renversement des polarités n'est pas couverts par la garantie.

3.5.3 Connection From Batteries / External Charge Controller To The DC Input Side – Sizing of Cables And Fuses

WARNING!

The input section of the inverter has large value capacitors connected across the input terminals. As soon as the DC input connection loop (Battery (+) terminal → Fuse → Positive input terminal of EVO™ → Negative input terminal of the EVO™ → Battery (–) terminal) is completed, these capacitors will start charging and the unit will momentarily draw very heavy current that will produce sparking on the last contact in the input loop even when the unit is in powered down condition.

Ensure that the fuse is inserted only after all the connections in the loop have been completed so that sparking is limited to the fuse area.

Flow of electric current in a conductor is opposed by the resistance of the conductor. The resistance of the conductor is directly proportional to the length of the conductor and inversely proportional to its cross-section (thickness). The resistance in the conductor produces undesirable effects of voltage drop and heating. The size (thickness / cross-section) of the conductors is designated by AWG (American Wire Gauge). Conductors thicker than AWG #4/0 are sized in MCM/kcmil.

Conductors are protected with insulating material rated for specific temperature e.g. 90˚C/194˚F. As current flow produces heat that affects insulation, there is a maximum permissible value of current (called "Ampacity") for each size of conductor based on

temperature rating of its insulation. The insulating material of the cables will also be affected by the elevated operating temperature of the terminals to which these are connected. Ampacity of cables is based on UL-1741 and the National Electrical Code (NEC)-2014. Please see details given under "Notes for Table 3.1".

The DC input circuit is required to handle very large DC currents and hence, the size of the cables and connectors should be selected to ensure minimum voltage drop between the battery and the inverter. Thinner cables and loose connections will result in poor inverter performance and will produce abnormal heating leading to risk of insulation melt down and fire. Normally, the thickness of the cable should be such that the voltage drop due to the current & the resistance of the length of the cable should be less than 2%. Use oil resistant, multi-stranded copper wire cables rated at 90º C minimum. Do not use aluminum cable as it has higher resistance per unit length. Cables can be bought at a marine / welding supply store.

Effects of low voltage on common electrical loads are given below:

- **Lighting circuits - incandescent and Quartz Halogen:** A 5% voltage drop causes an approximate 10% loss in light output. This is because the bulb not only receives less power, but the cooler filament drops from white-hot towards red-hot, emitting much less visible light.
- **Lighting circuits - fluorescent:** Voltage drop causes a nearly proportional drop in light output.
- **AC induction motors -** These are commonly found in power tools, appliances, well pumps etc. They exhibit very high surge demands when starting. Significant voltage drop in these circuits may cause failure to start and possible motor damage.
- **PV battery charging circuits** - These are critical because voltage drop can cause a disproportionate loss of charge current to charge a battery. A voltage drop greater than 5% can reduce charge current to the battery by a much greater percentage.

MISE EN GARDE!

La section d'entrée de l'onduleur a des condensateurs de grande valeur qui sont connecté aux bornes d'entrées. Tant que le boucle de connexion d'entrée CC (la borne (+) de la batterie → le fusible la borne → d'entrée positive du EVO™ → la borne d'entrée négative du EVO™ → la borne (-) de la batterie est complèt, les condesateurs commençeront à recharger. L'appareil prendra un courant fort brièvement pour s'alimenter qui va produire une étincelle sur le dernier contact du boucle d'entrée même si l'interrupteur ON/OFF du l'onduleur est dans la position OFF.

Assurez que le fusible est insèrer seulement après que toutes les connexions sont faites dans le boucle pour que des étincelles se produisent seulement à l'endroit du fusible.

Le flux du courant dans un conducteur est opposé par la résistance du conducteur. La résistance du conducteur est corrélative à la longueur du conducteur et inversement corrélatif à son diamètre (l'épaisseur). La résistance dans un conducteur produit des effects indésirables comme une perte de tension et une surchaffe. La taille (l'épaisseur) des conducteurs est classée par le AWG (American Wire Guage). Les conducteurs qui sont plus épais que la taille AWG #4/0 sont classé par MCM/kcmil.

Les conducteurs sont protègés par des matériaux isolants classés pour une température spécifique, par exemple,une température de 90˚C/194˚F. Le flux de courant produit de la chaleur et affecte l'isolation. Alors, il y a une valeur de courant maximale (aussi appellé « L'ampacité ») qui est permise pour chaque taille de conducteur et pour la classification température de l'isolation. Les matériaux isolants des câbles seront aussi affecter par la température de fonctionnement élèvée des bornes, à qui ils sont connectés. L'ampacité des câbles est basé sur UL-1741 et la Norme Nationale Électrique (NEC)-2014. « Notes for table 3.1 »

Le circuit d'entrée CC doit subir à des courants CC forts et ainsi, il faut que la taille des câbles et des connecteurs est sélectionnée pour réduire la perte de tension entre la batterie et l'onduleur. Avec des câbles moins épais et des connexions lâches la performance de l'onduleur est diminuée et en plus, ça pourrait produire une réchauffement anormale qui risque de fondre l'isolation ou commencer un incendie. Normalement, il faut que le câble soit assez épais pour réduire la perte de tension, dû au courant/ la résistance du câble, à moins que 2%. Utilisez des câble multifiliares (fils en cuivre et résistant à l'huile) qui sont classés au moins à 90º C. N'utilisez pas des câbles en aluminium car ils ont une résistance plus haute (par la longueur de l'unité). On peut achèter des câbles aux magasins de fournitures pour marin/soudage.

Les effets d'une faible tension pour des charges électriques communes

- ***Circuits d'allumage** - incandescent et Halogène Quartz: Une perte de tension à 5% causera une perte de 10% de la lumière émise. Cet effet est grâce à deux choses, non seulement l'ampoule reçoive moins de puissance mais, aussi le filament refroidi change de la chaleur-blanc à la chaleur-rouge, qui émet moins de lumière visible.*
- ***Circuits d'allumage*** - fluorescent: la perte de tension est presque proportionelle à la perte de la lumière émise.
- ***Moteurs à Induction CA*** - Souvent, Ils font partie des outils électriques, des dispositifs, pompe à puits, etc. Au démarrage, ils exigent une surcharge de puissance. Si la tension baisse trop, ils pourraient pas marcher et même seront endommager.
- ***Circuit de rechargement de batterie PV -*** La perte de tension pourrais causer une perte de puissance disproportionée. Par exemple, une perte de tension à 5% peut réduire le courant de charge par une pourcentage beaucoup plus grande que 5%.

3.5.4 Fuse Protection In The Battery Circuit

A battery is an unlimited source of current. Under short circuit conditions, a battery can supply thousands of Amperes of current. If there is a short circuit along the length of the cables that connects the battery to the inverter, thousands of Amperes of current can flow from the battery to the point of shorting and that section of the cable will become red-hot, the insulation will melt and the cable will ultimately break. This interruption of very high current will generate a hazardous, high temperature, high-energy arc with accompanying high-pressure wave that may cause fire, damage nearby objects and cause injury. To prevent occurrence of hazardous conditions under short circuit conditions, the fuse used in the battery circuit should limit the current **(should be "Current Limiting Type")**, blow in a very short time **(should be Fast Blow Type)** and at the same time, quench the arc in a safe manner. For this purpose, **UL Class T fuse or equivalent** should be used (**As per UL Standard 248-15**). This special purpose current limiting, very fast acting fuse will blow in less than 8 ms under short circuit conditions. **Appropriate capacity of the above Class T fuse or equivalent should be installed within 7" of the battery Plus (+) Terminal (Please see Table 3.1 for fuse sizing).**

Marine Rated Battery Fuses, MRBF-xxx Series made by Cooper Bussmann may also be used. These fuses comply with ISO 8820-6 for road vehicles.

WARNING!

It is mandatory to use appropriately sized external fuse in the battery and External Charger Circuits. If external fuse is not used and reverse polarity connection is made by oversight, the input section of the unit will be damaged/burnt. **Warranty will be voided in such a situation.**

MISE EN GARDE!

Il est obligatoire d'utiliser un fusible externe de taille appropriée à la batterie et les circuits chargeur externe . Si le fusible externe est pas utilisé et les inversions de polarité est faite par la surveillance , la section d'entrée de l'unité est endommagée / brûlé . ***La garantie sera annulée dans une telle situation .***

3.5.5 DC Input Connection for Battery

Battery is connected to terminals 1, 2 shown in Fig 3.8. The terminal consists of M10 Stud & Nut. Tightening torque for the nut is 70 kgf.cm (5 lbf.ft). **Sizes of cables and fuses are shown in Table 3.1.** Sizing is based on safety considerations specified in UL-1741 and NEC-2014. See details under "Notes for Table 3.1".

3.5.6 DC Input Connection for External Solar Charge Controller

External charger is connected to terminals consisting of M6 Stud (Pitch 1 mm) with Thumb Nut (3, 4 in Fig. 3.8).

- Max current fed through these terminals should be < 50A
- Use wire size given in Table 3.1.
- Tightening torque for the Thumb Nut is 35 kgf.cm (2.5 lbf.ft)
- Use 70A fuse in series with the Positive wire to protect against short circuit along the length of the connecting wires. **Fuse should be close to the Positive Input Terminal 3.**
- Please refer to Section 5.4 for details of charging using external solar charge controller.

TABLE 3.1 SIZING OF BATTERY SIDE CABLES AND EXTERNAL BATTERY SIDE FUSES

Model No.	Rated Continuous DC Input Current (See Note 1)	NEC Ampacity = 125% of Rated DC Input Current at Column 2 (See Note 2)	90°C Copper Conductor. Size Based on NEC Ampacity at Column (3) or 2%Voltage Drop, whichever is Thicker (See Note 3)				External Fuse Based on NEC Ampacity at Column (3) (See Note 4)
			Cable Running Distance between the Unit and the Battery (Cable Routing In Free Air)		Cable Running Distance between the Unit and the Battery (Cable Routing In Raceway)		
			Up to 5 ft.	Up to 10 ft.	Up to 5 ft.	Up to 10 ft.	
(Column 1)	(Column 2)	(Column 3)	(Column 4)	(Column 5)	(Column 6)	(Column 7)	(Column 8)
EVO-1212F EVO-1212F-HW	152	190	AWG #2	AWG #2/0	AWG #2/0	AWG #2/0	200A
EVO-1224F EVO-1224F-HW	76	95	AWG #6	AWG #4	AWG #3	AWG #3	100A
External Charger	50A	63A	AWG #6 (2% voltage drop is thicker)	AWG #2 (2% voltage drop is thicker)	AWG #6	AWG #2 (2% voltage drop is thicker)	70A

NOTES FOR TABLE 3.1 - SIZING OF BATTERY SIDE CABLES AND EXTERNAL BATTERY SIDE FUSES

1) Column 2 indicates the Rated Continuous DC Input Current drawn from the battery in Inverter Mode
2) Column 3 indicates NEC Ampacity based on which cable conductor sizes (Columns 4 to 7) are determined. NEC Ampacity is not less than 125% of the Rated Continuous DC Input Current (Column 2) - Refer to NEC-2014 (National Electrical Code) - Section 215.2(A)(1)(a) for Feeder Circuits.
3) Columns 4 to 7 indicate cable conductor size that is based on the following 2 considerations. Thicker conductor out of the following 2 considerations has been chosen:
   a) As per guidelines in NEC-2014 (National Electrical Code) - Ampacity Table 310.15(B)(16) for Raceway and Ampacity Table 310.15(B)(17) for Free Air. Conductor size is based on (i) NEC Ampacity specified at Column 3, (ii) Copper conductor with temperature rating of 90°C and (iii) Ambient temperature of 30°C / 86°F
   b) Voltage drop across the length of cables has been limited to 2% of 12V / 24V. Voltage drop has been calculated by multiplying the Rated DC Input Current (Column 2) and the resistance of the total length of Copper conductor (the total length of conductor has been taken as 2 times the running distance between the unit and the battery to cover 2 lengths of Positive and Negative cable conductors).
4) Column 8 indicates the size of external fuse in the battery circuit. It is mandatory to install this fuse within 7" of the battery Positive terminal to protect the internal DC Input Section of the unit and also to protect the battery cables against short circuit. Ampere rating of the fuse is based on the following considerations:
   a) The Ampere rating of the fuse is not less than NEC Ampacity of 125% of the Rated Continuous DC Input Current (Column 3) - Refer to NEC-2014 (National Electrical Code) - Section 215.3
   b) Standard Ampere Rating of Fuse equal to the above NEC Ampacity of 125% of the Rated DC Input Current has been used - Refer to NEC-2014 (National Electrical Code) - Section 240.6(A)
   c) Where Standard Fuse Rating does not match the required Ampacity of 125% of the Rated Continuous DC Input Current (Column 3), the next higher Standard Rating of the fuse has been used - Refer to NEC-2014 (National Electrical Code) - Section 240.4(B)
   d) Type of fuse: Fast-acting, Current Limiting, UL Class T (UL Standard 248-15) or equivalent

3.5.7 Using Proper DC Cable Termination & Tightening Torques

The battery end and the inverter end of the wires should have proper terminal lugs that will ensure a firm and tight connection. Choose lugs to fit the wire size and the stud sizes on the inverter and battery ends.

Tightening torques to be applied to the wiring terminals are given in Table below:

TIGHTENING TORQUES		
Battery Input Connectors	**External Charger Input Connectors**	**AC Input and Output Connectors**
70 kgf.cm (5.0 lbf.ft)	35 kgf.cm (2.5 lbf.ft)	7 to 12 kgf.cm (0.5 to 0.9 lbf.ft)

3.5.8 Reducing RF Interference

To reduce the effect of radiated interference, shield the wires with sheathing / copper foil / braiding. For details, refer to Limiting Electro-Magnetic Interference" at Section 1.3.4.

3.5.9 Taping Battery Wires Together To Reduce Inductance

Do not keep the battery wires far apart. Keep them taped together to reduce their inductance. Reduced inductance of the battery wires helps to reduce induced voltages. This reduces ripple in the battery wires and improves performance and efficiency. For details, refer to Limiting Electro-Magnetic Interference" at Section 1.3.4.

3.6 AC INPUT AND OUTPUT - LAYOUT AND CONNECTION ARRANGEMENT

3.6.1 AC Input and Output Connections for EVO-1212F and EVO-1224F

3.6.1.1 AC Input Connection: Grid AC input is fed through 20A AC Inlet Plug Connector – IEC60320 C-20 (9, Fig 3.9.1). Use NEMA 20A-125 VAC detachable Power Cord [NEMA5-20 Plug for connecting to the 120VAC Outlet and IEC60320 C-19 Socket Connector on the other end for connection to the Inlet Plug Connector (9, Fig 3.9.1)]. **For convenience, IEC60320 C-19 socket connector has been provided. (See Section 2.6 - Contents of Package).**

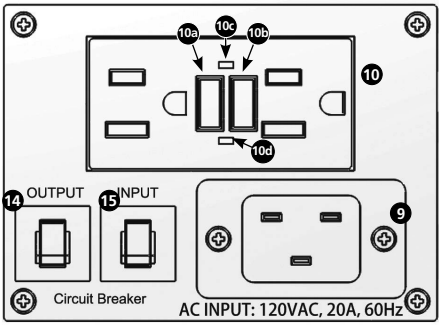

LEGEND for Fig 3.9.1

9. 20A AC Inlet Connector – IEC60320 C-20 for connecting detachable AC power cord for 120 VAC input from Grid
10. NEMA5-15 Duplex GFCI Outlets for 120 VAC output
    - 10a. GFCI Test Button
    - 10b. GFCI Reset Button
    - 10c. Red LED: GFCI Life and End Alarm
    - 10d. Green LED: GFCI ON
14. AC output Breaker, 15A
15. AC Input Breaker, 20A

Fig 3.9.1 AC Input and Output Connections – EVO-1212F and EVO-1224F

3.6.1.2 AC Output Connection Through Ground Fault Circuit Interrupter (GFCI)

An un-intentional electric path between a source of current and a grounded surface is referred to as a "Ground Fault". Ground faults occur when current is leaking somewhere. In effect, electricity is escaping to the ground. How it leaks is very important. If your body provides a path to the ground for this leakage (dry human body has a low resistance of only around 1 K Ohm), you could be injured, burned, severely shocked or electrocuted. A Ground Fault Circuit Interrupter (GFCI) protects people from electric shock by detecting leakage and cutting off the AC source. The leakage detection circuit compares the current sent to the load and returned back from the load. If the returned current is less by 5 to 6 mA due to leakage, the GFCI trips. The GFCI also trips if it sees Neutral to Ground bond on the load side of the GFCI.

The AC output of EVO-1212F and EVO-1224F is available through a NEMA5-15R GFCI Duplex Receptacle (10 in Figs 2.1 and 3.9.1). The Neutral slot of this receptacle (longer rectangular slot) is internally bonded to the metal chassis of the inverter.

Self Monitoring GFCI: The GFCI is "Self Monitoring Type" as per UL Standard Ul-943. As soon as the Inverter is switched ON and 120 VAC is available on the internal Line Side of the GFCI, Red LED marked "Life End Alarm" (10c in Figs 2.1 and 3.9.1) will flash once and then will remain OFF. The Green LED (10d in Figs 2.1 and 3.9.1) will switch ON indicating that AC power is available at the Load Side outlets.

As soon as the Inverter is switched OFF and 120 VAC is removed from the internal Line Side of the GFCI, Red LED marked "Life End Alarm" (10c in Figs 2.1 and 3.9.1) will flash once and then will remain OFF. The Green LED (10d in Figs 2.1 and 3.9.1) will switch OFF indicating that AC power is NOT available at the Load Side outlets.

The Self Monitoring Function inside the GFCI will monitor proper operation of ground fault protection circuitry every 1 to 10 minutes. If defect in the ground fault protection circuit is detected, the Red LED marked "Life End Alarm" (10c in Figs 2.1 and 3.9.1) will remain ON and the GFCI will have to be replaced.

Monthly Testing of GFCI: Test the operation of the GFCI monthly as follows:

- Switch ON the inverter. As soon as 120 VAC output from the inverter is available on the internal Line Side of the GFCI, Red LED marked "Life End Alarm" (10c in Figs 2.1 and 3.9.1) will flash once within 5 sec and then will remain OFF. The Green LED (10d in Figs 2.1 and 3.9.1) will switch ON indicating that AC power is available at the Load Side outlets.
- Plug a test lamp into the outlet and switch ON the test lamp.
- Press the "Test Button" (10a in Figs 2.1 and 3.9.1). The "Reset Button" (10b in Figs 2.1 and 3.9.1) will pop out. The GFCI will be forced to trip and cut off AC power to the load side outlets. Green LED (10d in Figs 2.1 and 3.9.1) will switch OFF. The test lamp will also switch OFF.
- Press the "Reset Button" (10b in Figs 2.1 and 3.9.1). The GFCI will reset and AC power to the load side outlets will be restored. Green LED (10d in Figs 2.1 and 3.9.1) will switch ON. The test lamp will also switch ON.
- If the above Test / Reset operation cannot be carried out, replace the GFCI.

GFCI Tripping and Reset: If there is a leakage of 5 to 6mA due to ground fault on the load side or , there is a Neutral to Ground bond on the load side, the GFCI will trip and the "Reset Button" (10b in Figs 2.1 and 3.9.1) will pop out. AC power to the load side outlets will be cut off. Green LED (10d in Figs 2.1 and 3.9.1) will switch OFF. Remove the ground fault in the load circuit. Press the "Reset Button" (10b in Figs 2.1 and 3.9.1). The GFCI will reset and AC power to the load side outlets will be restored. Green LED (10d in Figs 2.1 and 3.9.1) will switch ON.

INFO

For the Reset Button (10b in Figs 2.1 and 3.9.1) to operate, the Inverter has to be in ON condition so that AC power is available to the internal Line Side of the GFCI.

CAUTION!

1. Do not feed the output from the GFCI receptacle to a Panel Board / Load Center where the Neutral is bonded to the Earth Ground. This will trip the GFCI.
2. If an extension cord is used, please ensure that the cord is 2-Pole Grounding Type (3 pin).

ATTENTION!

1. N'alimentent pas la sortie de la prise GFCI à un Panel de sélection / Charger Centre où la position neutre est lié à la terre. Ce qui déclenche le disjoncteur.
2. Si une rallonge est utilisée, veuillez vous assurer que le cordon est mise à la terre à 2 pôles (3 broches)

3.6.2 AC Input and Output Connections and Layout Arrangement for EVO-1212F-HW and EVO-1224F-HW

AC input and output connections for EVO-1212F-HW and EVO-1224F-HW are shown in Figs 3.9.2(a) and 3.9.2(b) below. (Extracted from the layout at Fig 2.3).

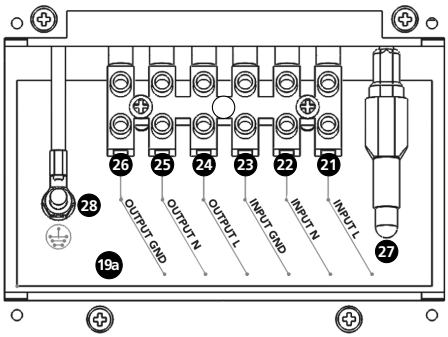

Fig 3.9.2(a) Pocket for AC Input and Output Connections for EVO-1212F-HW and EVO1224F-HW

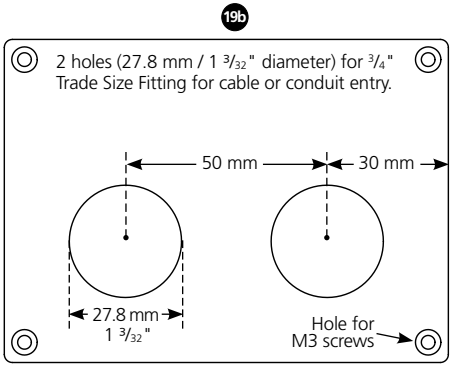

Fig 3.9.2(b) Cover Plate for Pocket for AC input and Output Connections

LEGEND for Figs 3.9.1(a) and 3.9.1(b)

19(a). Pocket for AC Input/Output Terminals
19(b). Plate to cover pocket 19(a) - The plate is held with 4 mounting screws - M3 (Pitch 0.5 mm) x 6 mm. The plate has 2 holes (27.8 mm/ 1 3/32" diameter) for 3/4" Trade Size Fitting for cable or conduit entry.
20. AC Input/Output Terminal Block
- Terminal hole: 3.5 mm x 3.0 mm for up to AWG #10
- Set Screw: M3 (Pitch 0.5 mm)

21. "INPUT L" - For connecting Line Conductor of AC input wiring
22. "INPUT N" - For connecting Neutral Conductor of AC input wiring
23. "INPUT GND" - For connecting Earth Ground Conductor of AC input wiring
24. "OUTPUT L" - For connecting Line Conductor of output wiring to Electrical Panelboard
25. "OUTPUT N" - For connecting Neutral Conductor of output wiring to Electrical Panelboard
26. "OUTPUT GND" - For connecting Earth Ground Conductor of output wiring to Electrical Panelboard
27. Male/Female Insulated Quick Disconnect for disabling Output Neutral to chassis Ground bond in Inverter Mode (Please see Sections 4.4.1 / 4.4.2 and Fig 4.1)
28. AC input and output Ground connection to metal chassis - Stud and Nut, M4 (Pitch 0.7 mm)

3.6.3 System Grounding and Output Neutral to Chassis Ground Bond Switching

WARNING!

- In "Inverting Mode" (default condition), the Neutral of the AC output of the unit gets bonded to the metal chassis of the unit through the internal "Neutral to Chassis Switching Relay" (Relay RY2 in Fig 4.1).
- In "Charging Mode", the internal "Output Neutral to Chassis Switching Relay - RY2" disconnects the Neutral of the AC output connection from the chassis of the unit. The Neutral of the AC output connection of the unit will get bonded to the

Earth Ground through the Neutral to Earth Ground bond in the AC Breaker Panel/ Load Center supplying Grid power / AC output connections of the generator.

- **Disabling Neutral to Ground Bond**: In some applications, the Output Neutral may be required to remain isolated from chassis/Ground at all times. For this, automatic Output Neutral to chassis Ground bond can be disabled by disconnecting the Insulated Male/Female Quick Disconnect [27, Fig 3.9.2(a)] located in the AC Wiring Compartment in EVO-1212F-HW/1224F-HW. **In EVO-1212F/1224F, this Insulated Male/Female Quick Disconnect is accessible after opening the top cover of the unit.**
- System grounding, as required by National / Local Electrical Codes / Standards, is the responsibility of the user / system installer.

For further details please refer to Sections 4.4.1 / 4.4.2 and Fig 4.1.

MISE EN GARDE!

- *En état de défaut, le neutre de la sortie CA de l'unité dans le "Mode de l'onduleur / décharge" obtient lié au châssis métallique de l'unité à travers la interne "Neutre à châssis relais de commutation" (RY2 Relais de la figure 4.1)*
- *Dans "Mode de chargement", l'interne "Neutre à châssis relais de commutation - RY2" déconnecte le neutre de la connexion de sortie AC du châssis de l'unité. Le neutre de la connexion de sortie CA de l'unité va obtenir lié à la terre des masses à travers le neutre à la terre liaison au sol dans le centre de panneau de disjoncteurs AC / charge alimenter Grille / connexions de sortie CA du générateur.*
- ***Désactivation du lien neutre à mise a terre:*** *Dans certaines applications, il est nécessaire que la sortie neutre soit isolé du châssis/mise a terre à tout moment. Pour cela, la production automatique de la position neutre à la masse du châssis bon peut être désactivé en déconnectant le mâle/femelle isolée [Déconnexion rapide, 27 Fig 3.9.2(a)] situé dans le compartiment de câblage AC dans* **EVO-1212F-HW/1224F-HW. Dans EVO-1212F/1224F, ce mâle/femelle isolée est accessible à déconnexion rapide après l'ouverture du capot de l'unité.**
- *Mise à la terre du système, tel que requis par la National / codes électriques locaux / normes, est de la responsabilité de l'installateur utilisateur / système.*

3.6.4 AC Input Considerations – Voltage And Frequency

The EVO™ unit is designed to accept 120 VAC, 60 Hz single phase AC power from Grid or from good quality Generator with stable 120 VAC / 60 Hz output. These 120V versions come preset for 60 Hz operation.

3.6.5 Preventing Paralleling of the AC Output

WARNING!

The AC output of the unit cannot be synchronized with another AC source and hence, it is not suitable for paralleling on the output side. The AC output of the unit should never be connected directly to an electrical breaker panel / load center which is also fed from another AC source. Such a connection may result in parallel operation of different power sources and AC power from the other AC source will be fed back into the unit which will instantly damage the output section of the unit and may also pose a fire and safety hazard. If an electrical breaker panel / load center is fed from this unit and this panel is also required to be powered from additional alternate AC source, the AC power from the

additional AC source should first be fed to a suitable Manual/Automatic Transfer Switch and the output of the transfer switch should be connected to the electrical breaker panel / load center. To prevent possibility of paralleling and severe damage to the inverter, never use a simple jumper cable with a male plug on both ends to connect the AC output of the inverter to a handy wall receptacle in the home / RV.

MISE EN GARDE!

La sortie de courant alternatif de l'unité ne peut pas être synchronisée avec une autre source de courant alternatif et, par conséquent, il ne convient pas pour mise en parallèle du côté de la sortie. La sortie AC de l'unité ne doit jamais être connecté directement à un panneau central / de charge disjoncteur électrique qui est également alimenté par une autre source de courant alternatif. Une telle connexion peut entraîner un fonctionnement parallèle de différentes sources d'énergie et la puissance AC de l'autre source de courant alternatif est réinjecté dans l'unité qui va instantanément endommager la section de sortie de l'unité et peuvent aussi poser un risque d'incendie et de sécurité. Si un centre panneau de disjoncteur électrique / charge est alimentée à partir de cette unité et ce panneau est également nécessaire pour être alimenté à partir de suppléant supplémentaire source de courant alternatif, l'alimentation de la source de courant alternatif supplémentaire doit d'abord être introduit dans un manuel approprié / commutateur de transfert automatique et le sortie du commutateur de transfert doit être relié au centre panneau / de la charge électrique du disjoncteur. Pour éviter possibilité de mise en parallèle et de graves dommages à l'onduleur, ne jamais utiliser un câble de raccordement simple avec une fiche mâle sur les deux extrémités pour raccorder la sortie AC de l'onduleur à une prise murale à portée de main à la maison / RV.

3.6.6 Connecting to Multi-wire Branch Circuits

DO NOT directly connect the Hot side of the 120 VAC of the unit to the two Hot Legs of the 120 / 240 VAC Breaker Panel / Load Center where Multi-wire (common Neutral) Branch Circuit wiring method is used for distribution of AC power. This may lead to overloading / overheating of the Neutral conductor and is a risk of fire.

A split phase transformer (Isolated or Auto-transformer) of suitable VA rating (25 % more than the VA rating of the unit) with Primary of 120 VAC and Secondary of 120 / 240 VAC (Two 120 VAC split phases 180 degrees apart) should be used. The Hot and Neutral of the 120 VAC output of the inverter should be fed to the Primary of this transformer and the 2 Hot outputs (120 VAC split phases) and the Neutral from the Secondary of this transformer should be connected to the Electrical Breaker Panel / Load Center.

Please see details on-line under White Paper titled "120 / 240 VAC Single Split Phase System and Multi-wire Branch Circuits" at: www.samlexamerica.com (Home > Support > White Papers).

3.7 AC INPUT & OUTPUT WIRING SUPPLY CONNECTIONS

3.7.1 AC Input/Output Supply Connections for EVO-1212F and EVO-1224F

120 VAC input is fed through Male AC Power Inlet Plug - Rating 20A (IEC 60320 C-20) (9, Fig 2.1). Mating Female Socket Connector rated for 20A (IEC 60320 C-19) will be required. For convenience, this Connector has been supplied with the unit (See Section 2.6 - "Contents of Package"). The AC input connector is protected against over-current by 20A Circuit Breaker (15, Fig 2.1).

120 VAC output is supplied through NEMA5-15 Duplex GFCI Outlets (10, Fig 2.1). The outlets are protected against over current by 15A Circuit Breaker (14, Fig 2.1).

3.7.2 AC Input / Output Supply Connectios – EVO-1212F-HW / EVO-1224F-HW

WARNING!

Please ensure that when using the hard-wired version EVO-1212F/1224F-HW, the AC input is connected to the AC input terminals and not to the AC output terminals and that this connection is made only when the unit is in OFF condition.

Please note that when the unit is powered on, a Self Test is carried out which includes a check if the AC input conductors have been erroneously connected to the AC output terminals instead of AC input terminals. If this wrong connection is detected, (voltage > 10 VAC is seen on terminals OUTPUT L & OUTPUT N at the time of switching on of the unit), the unit will not be powered on and a message "Output Fault" will be displayed. This protection against error in connection of the AC input wiring is active only when this wrong connection is made when the unit is in OFF condition and is switched ON subsequently.

If the AC input is erroneously connected / fed to the AC output connections when the unit is ON condition, the above protection will not work and the Inverter Section will be burnt instantaneously and may become a fire hazard.

MISE EN GARDE!

Veuillez vous assurer que lors de l'utilisation de la version filaire EVO-1212F/1224F-HW, l'entrée CA est connecté à l'entrée aux bornes et non pas à l'AC bornes de sortie et que cette connexion est effectuée uniquement lorsque l'appareil est en position d'arrêt.

lorsque l'unité est sous tension, un test automatique est effectué qui inclut une vérification si l'entrée CA par erreur ont été conducteurs connectés à l'AC les terminaux de sortie au lieu d'AC les bornes d'entrée. Si cette erreur est détectée, (tension > ; 10 VAC est perçu sur les bornes OUTPUT L & ; SORTIE N au moment de la mise en marche de l'unité), l'appareil ne sera pas mis sous tension et un message "Défaut de sortie" s'affiche. Cette protection contre l'erreur lors de la connexion de l'entrée CA câblage est actif seulement quand cette mauvaise connexion est établie lorsque l'appareil est en position d'arrêt et est activée par la suite.

Si l'entrée CA est connecté par erreur / nourri à l'AC de sortie lorsque l'appareil est en état, la protection ci-dessus ne fonctionnera pas et la Section de l'onduleur sera brûlé instantanément et peut devenir un risque d'incendie.

The AC input and output supply connections are located in a pocket protected by a cover with a removable front plate [19(a), Fig 3.9.2(a) and 19(b), Fig 3.9.2(b)]. Two 27.8 mm / 1$^{3}/_{32}$" diameter holes [19(b), Fig 3.9.2(b)] have been provided for cable / conduit entry. Remove the caps covering the holes and install appropriate ¾" Trade Size Fitting for routing the AC input and output wires/conduits.

Screw down type of terminal block [20, Fig 3.9.2(a)] is used for connecting the wires. The hole size for wire entry is 3.5 x 3 mm and set screw size is M3. It can accommodate conductors with solid or multi-stranded wire size range of up to AWG #10. Strip adequate insulation from the end of the wire (Fig. 3.11). Avoid nicking the wire when stripping the insulation. Wire End Terminals have been provided (see Section 2.6, "Contents of Package") for firm connection under

the set screw. Insert the bare end of the wire into the barrel portion of the Wire End Terminal & crimp barrel portion using suitable crimping tool (Fig 3.11). Use #12 AWG terminals for AWG #12 wiring for AC input and AWG #14 terminals for AWG #14 wiring for AC output. Insert the terminated end of the wire fully into the terminal slot till it stops. Tighten the screw firmly. Tightening torque for the screws – 7 to 12 Kgf*cm / 0.5 to 0.9 lbf*ft.

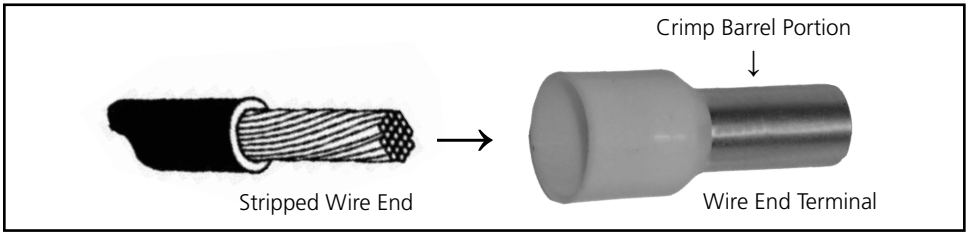

Fig 3.11 Stripped Wire End Terminal on AC Wiring

3.8 SIZING OF WIRING AND BREAKERS - AC INPUT SIDE

WARNING!

For EVO-1212F-HW / 1224F-HW, AC Breaker for the AC input circuits has NOT been provided internally. This has to be provided externally by the installer / user based on guidelines given below. Please note that guidelines given below on wire sizing and over-current protection will be superseded by the applicable National / Local Electrical Codes.

MISE EN GARDE!

Pour EVO-1212F-HW / 1224F-HW, Breaker AC pour les circuits d'entrée AC ont pas été fournis en interne. Cela doit être fournie en externe par l'installateur / l'utilisateur en fonction des directives données ci-dessous. Se il vous plaît noter que les directives ci-dessous sur dimensionnement des câbles et protection contre les surintensités seront remplacées par les nationaux / codes électriques locaux applicables.

3.8.1 Tables for Wire and Breaker Sizing - AC Input Side

Table 3.2 provides details of wire and breaker sizing for the AC input side.

AC input side wiring and breaker sizes depend upon the maximum continuous AC input current under various operating conditions described in the succeeding paragraphs.

- When Grid input is available and the unit is operating in Charging / Pass Through Mode, the AC Input Current will be determined as follows:
  - AC Input Current will be equal to the sum of the AC Side Battery Charging Current and the Pass Through current.
  - The AC Input current in Charging / Pass Through Mode will be restricted by the breaker in the AC Input Branch Circuit that is feeding the unit. The AC Input Current drawn by the unit can be programmed to the desired "GRID MAX CURRENT" to match the Amp rating of breaker in the AC Input Branch Circuit. Optional Remote Control EVO-RC-PLUS is required to change this limit [See EVO-RC-PLUS Manual: (i) Fig 4.3, Screen 2 (ii) Table 4.4 Screen 2 and (ii) Section 4.5.2.2]. The "GRID MAX CURRENT" set at 20A (Default Setting).

TABLE 3.2 SIZING OF AC INPUT WIRING AND BREAKERS				
Model No. (Rated Output Power in Inverter Mode)	**Maximum AC Input Current Limit (Parameter "GRID MAX CURRENT") (See Note 1)**	**NEC Ampacity = 125% of Column 2 (See Note 2)**	**Conductor Size Based on NEC Ampacity at Column 5 (See Note 3)**	**Size of Breaker based on Column 4 (See Note 4)**
(Column 1)	**(Column 2)**	**(Column 3)**	**(Column 4)**	**(Column 5)**
EVO-1212F (1200VA)	20A	25A	AWG #12	20A
EVO-1212F-HW (1200VA)	20A	25A	AWG #12	20A
EVO-1224F (1200VA)	20A	25A	AWG #12	20A
EVO-1224F-HW (1200VA)	20A	25A	AWG #12	20A

NOTES FOR TABLE 3.2 - SIZING OF GRID AND BREAKERS

1. Column 2 indicates the Maximum AC Input Current which is equal to the maximum internal current limit of 20A programmable through parameter "GRID CURRENT" (Refer to Section 4.5.2.2 of Remote Control EVO-RC-PLUS Manual).

2. Column 3 indicates NEC Ampacity based on which the wiring conductor size (Column 4) is determined. This NEC Ampacity is not less than 125% of the maximum input current (Column 2) - Refer to NEC-2014 (National Electrical Code) - Section 210.19(A)(1)(a) regarding minimum Ampacity and size of Branch Circuit Conductors.

3. a. **For EVO-1212F-HW and EVO-1224F-HW:** Column 4 indicates the wiring conductor size that has been determined based on NEC-2014 (National Electrical Code) - Ampacity Table 310.15(B)(16) for Raceway for EVO-1212F and EVO-1224F-HW. This conductor size is based on (i) NEC Ampacity (Column 3) (ii) conductor temperature of 75°C / 167°F and (iii) ambient temperature of 30°C / 86°F.

   b. **For EVO-1212F and EVO-1224F:** Power may also be supplied through NEMA rated 20A-125V detachable Power Cord (3 conductors, AWG #12) for free air - Ampacity Table 310.15(B)(17)

4. Column 5 indicates the Amp rating of AC input breaker. EVO-1212F/EVO-1224F have built-in 20A breaker (15, Fig 2.1). **External 20A AC input breaker is required to be installed for EVO-1212F-HW/1224F-HW.** The Amp rating of this breaker is based on the following considerations:

   a. The Amp rating of the fuse has to be ≤ the Ampacity of wire size at Column 4. 20A rating has been selected based on Column 2.

   b. Closest Standard Ampere Rating of Breaker (20A) has been used - Refer to NEC-2014 (National Electrical Code) - Section 240.6(A) regarding over current protection

   c. Type of external AC input breaker (for EVO-1212F-HW / 1224F-HW) : Standard circuit breaker for 120 VAC Load Center/Breaker Panel/Panel Board

3.9 SIZING OF AC OUTPUT WIRING AND BREAKERS

3.9.1 EVO-1212F and EVO-1224F

120 VAC output is supplied through NEMA5-15 Duplex GFCI Outlets (15, Fig 2.1). The outlets are protected against over current through 15A Circuit Breaker (14, Fig 2.1).

Use power cord with NEMA5-15 plug and conductor size AWG #14.

3.9.2 EVO-1212F-HW and EVO-1224F-HW

WARNING!

For EVO-1212F-HW and EVO-1224F-HW, AC Breakers for the AC output circuits have NOT been provided internally. These have to be provided externally by the installer / user based on guidelines given below. Please note that guidelines given below on wire sizing and over-current protection will be superseded by the applicable National / Local Electrical Codes.

MISE EN GARDE!

Pour EVO-1212F-HW and EVO-1224F-HW breakers AC pour les circuits d'entrée AC ont pas été fournis en interne. Ceux-ci doivent être fournies à l'extérieur par l'installateur / utilisateur sur la base des directives données ci-dessous. Se il vous plaît noter que les directives ci-dessous sur dimensionnement des câbles et protection contre les surintensités seront remplacées par les nationaux / codes électriques locaux applicables.

Table 3.3 provides details of wire and breaker sizing for the AC output side for EVO-1212F-HW and EVO-1224F-HW.

AC wiring and breaker sizes on the AC output side are required to be determined by the Rated Load Current when operating in Inverter Mode (Column 1).

Table 3.3 SIZING OF AC OUTPUT WIRING AND BREAKERS

Model No. (Rated Output Power in Inverter Mode) (Column 1)	Rated AC Output Current in Inverter Mode (See Note 1) (Column 2)	NEC Ampacity = 125% of Column 2 (See Note 2) (Column 3)	Conductor Size based on NEC Ampacity at Column 3 (See Note 3) (Column 4)	Size of Breaker (Column 5)
EVO-1212F-HW (1200VA)	10A	12.5A	AWG #14	External Breaker 15A
EVO-1224F-HW (1200VA)	10A	12.5A	AWG #14	External Breaker 15A

NOTES FOR TABLE 3.3 - AC OUTPUT WIRING AND BREAKERS

1) Column 2 indicates the Rated AC Output Current in Inverter Mode

2) Column 3 indicates NEC Ampacity based on which the output-wiring conductor is sized. This NEC Ampacity is not less than 125% of the Rated Output Current in Inverter Mode (Column 2). - Refer to NEC-2014 (National Electrical Code) - Section 215.2(A)(1)(a) regarding Feeder Circuit Conductors. PLEASE NOTE that when the unit is operating in Inverter Mode, it is considered to be an AC source that is feeding power to the Load Center / Breaker Panel / Panel Board on the load side. Hence, the AC output circuit of the unit is considered to be a Feeder Circuit for purposes of NEC-2014.

3) Column 4 indicates conductor size for the output side wiring. The size is based on NEC-2014 (National Electrical Code) - Ampacity Table 310.15(B)(16) for Raceway. Conductor size is based on (i) NEC Ampacity (Column 3), (ii) conductor temperature of 75°C and (iii) ambient temperature of 30°C / 86°F.

4) Column 5 indicates the Amp rating of breaker. Following should be considered:

   a) Ampere rating should not be less than NEC Ampacity (Column 3) - Refer to NEC-2014 (National Electrical Code) - Section 215.3 regarding over-current protection of Feeder Circuit Conductors
   b) Closest Standard Breaker Ampere Rating of 15A has been used - Refer to NEC-2014 (National Electrical Code) - Section 240.6(A) regarding Standard Ampere Ratings
   c) As Standard Breaker Rating does not match the required NEC Ampacity at Column 3 (12.5A), the next higher Standard Ampere Rating of the breaker (15A) has been used
      - Refer to NEC-2014 (National Electrical Code) - Section 240.4(B) regarding over current devices rated 800 Amps or less
   d) Type of breaker: Standard circuit breaker for 120 VAC Load Center /Breaker Panel
   e) EVO-1212F and EVO-1224F use built-in Breaker (14, Fig 2.1). External 15A Breaker is required to be used for EVO-1212F-HW / 1224F-HW.

3.10 GFCI PROTECTION FOR VEHICLE APPLICATION

When EVO-1212F-HW and EVO-1224-HW are installed in vehicles, ensure that Ground Fault Circuit Interrupter(s) are installed in the vehicle wiring system to protect all branch circuits. Details of tested and approved GFCI's are given in Table 1.5.

EVO-1212F and EVO-1224F have built-in GFCI outlet.

3.11 GROUNDING TO EARTH OR TO OTHER DESIGNATED GROUND

Grounding means connecting (bonding) to Earth Ground or to the other designated Ground. For example, in a motorhome / caravan, the metal frame of the motorhome / caravan is normally designated as the Negative DC Ground / RV Ground. Similarly, all metal portions of boats and marine craft are bonded together and called Boat Ground.

Grounding is required for (i) protection against damage due to lightning strike and (ii) protection against electric shock due to "Ground Fault". In case of EVO™, "Ground Fault" may occur due to inadvertent contact between an energized ungrounded current carrying conductor and exposed metal surface resulting in voltage getting fed to (i) the metal chassis of the EVO™ or (ii) to the metal chassis of the devices connected to EVO™ or (iii) to the metal frame/

chassis in an RV / motorhome / caravan. When this energized exposed surface is touched, the voltage will drive current through the body to Earth Ground producing electric shock. When properly grounded to Earth Ground (or Frame / Chassis Ground in motorhome or caravan), the Leakage Current Protection Device (like RCD, GFCI etc.) or Over Current Protection Device (like Circuit Breaker or Fuse) will trip and interrupt the circuit feeding power from the AC source (EVO™ / AC Input) or the DC source (12V / 24V battery). Proper grounding will ensure that all exposed metal surfaces will have equal potential and will be bonded to (i) a single common Earth Ground point i.e. the Ground Rod / buried metallic water / gas pipe at the premises or (ii) the Frame / Chassis Ground in a motorhome / caravan.

Please read following on-line White Papers for complete understanding of Grounding at www.samlexamerica.com (Home > Support > White Papers):

- **"Grounded Electrical Power Distribution"**
- **"Grounding System and Lightning / Ground Fault Protection"**

3.12 GROUNDING ARRANGEMENT

Internally, EVO™ consists of DC and AC Section that are isolated through a transformer (See these sections in Figs 3.12 and 3.13). Both these sections are required to be grounded appropriately.

For wiring details for appropriate grounding, refer to Figs 3.12 and 3.13, and associated explanation under Section 3.13 and 3.14.

When using a generator instead of Grid, please ensure that the Neutral of the generator is bonded to the metal frame of the generator and the metal frame of the generator is bonded to Earth Ground through the Grounding Electrode (GE) i.e. the Ground Rod. Refer to Section 3.14.1 for additional details.

3.13 DC SIDE GROUNDING

Please refer to Figs 3.12 and 3.13.

DC side grounding involves bonding of the metal frame/chassis of EVO™, the metal chassis of the DC Electrical Panel and the Battery Negative Terminal to Earth Ground in shore based installation (Fig 3.12) or to the metal frame / "Chassis ⏚" of the motorhome / caravan (Fig 3.13). This ensures that in case of a ground fault in the +12V / +24V circuit, the fuse in the +Battery line blows to clear the fault. This fuse in the +Battery line has Ampere capacity matching the rated DC input current of the EVO™ in Inverter Mode. The wire size used for DC side grounding should be minimum AWG #6 or of the same size as the battery cable, whichever is thicker (Battery cable size should have minimum Ampacity ≥ the Ampere rating of this battery fuse depending upon the model of the EVO™ being used). **This recommendation on sizing of the DC Side Grounding Wire will be superseded by the National / Local Electrical Codes.**

CAUTION!

As per American Boat and Yacht Council (ABYC) Standard E-11 for AC and DC Electrical Systems on Boats, the size of DC side grounding wire shall not be smaller than one size under that required for current carrying conductors supplying the device. Hence, for application on EVO™ on boat / yacht, the size of the DC side grounding conductor should be of the same or one size smaller than the size of battery cable specified in Table 3.1.

ATTENTION!

Selon le « American Boat and Yacht Council » (ABYC) la norme E-11 pour le système électrique CA et CC des bateaux, la taille du fil de mise à la terre du côté CC ne doit pas être inférieure à un format sous celle requise pour les conducteurs tenant le courant pour alimenter l'appareil. Par conséquent, pour l'application EVO™ sur le bateau / yacht, la taille du conducteur de mise a terre côté CC devrait être de la même ou strictement une taille plus petite que la taille du câble de batterie indiqué dans le tableau 3.1.

INFO

As described at Section 3.14, the metal frame / chassis of the EVO™ [Figs 3.12 and 3.13] is bonded to the Earth Ground "GE" (Ground Rod) for AC side grounding. It may be argued that if the metal frame / chassis of EVO™ is already bonded to Main Earth Ground "GE" for AC side grounding, why is it necessary to provide additional DC side grounding wiring? [Wiring that bonds DC Grounding Terminals "5", "G-B" and GE in Figs 3.12 and 3.13]. If separate thicker grounding wire of the same size as the battery cable was not provided for the DC side grounding and there was a ground fault in the battery circuit, very large DC fault current from Battery+ would flow through the smaller size AC grounding wires to the Battery Negative through Earth Ground. These smaller size AC side grounding wires would be damaged due to very high DC side fault current (100A to 200A depending on the Model of the EVO™ being used).

A DC Side Grounding Connector (5) (5 in Figs 2.1 and 3.8) is provided for connecting to the System Ground. The connector can accept wire sizes AWG # 4–6. The set screw size is M6.

A DC Distribution Panel, as shown in Figs 3.12 and 3.13, is normally provided to connect the batteries and distribute DC power to the inverter and to the other DC loads.

The Negative of the battery is connected to the Neg (-) Bus of the DC Electrical Panel which, in turn, is connected to its Grounding Bus Bar (G-B). Grounding Bus Bar G-B of the DC Electrical Panel is further bonded to the Grounding Bus Bar "G-B" of the Grid Electrical Panel and then to the Grounding Electrode (GE), also called Ground Rod. Hence, the Battery Negative, the chassis of the DC Electrical Panel and the metal chassis of the EVO™ will all be bonded to the Earth Ground.

Connect the DC Grounding Terminal (5) [5 in Figs 2.1 and 3.8], to the Grounding Bus Bar (G-B) in the DC Electrical Panel using AWG #6 insulated stranded copper wire. Similarly, use AWG #6 wire to connect the Grounding Bus Bar "G-B" in the DC Electrical Panel to the Grounding Bus Bar "G-B" in the Grid Electrical Panel. For application of EVO™ on a boat, the size of this wire should be of the same size or one size smaller than the battery Negative wire (See CAUTION! above).

The connections must be tight against bare metal. Use star washers to penetrate paint and corrosion. **As the Equipment Grounding Bus Bar ("G-B") in the DC Electrical Panel is bonded to the Grounding Electrode (GE) through Grounding Bus Bar "G-B" in the Grid Electrical Panel, the metal chassis of the EVO™ will be bonded to Earth Ground for protection against Ground fault on the DC side of EVO™.**

3.14 AC SIDE GROUNDING

3.14.1 AC Side Grounding Requirements for Generators

Small portable generators supplied with receptacles will often have the Neutral conductor bonded to the generator frame. The frame of portable generator is normally isolated from the Earth Ground.

Larger generators typically do not have the Neutral grounded to the frame. It is to be ensured that in these generators, the Neutral should be connected to the metal frame of the generator.

WARNING!

If a Generator is used to feed AC input, it is to be ensured that the Neutral of the Generator output is bonded to the metal frame of the Generator.

MISE EN GARDE!

Si un générateur est utilisé pour envoyer de l'entrée CA, c'est de s'assurer que la position neutre de la sortie du générateur est lié à la structure métallique du générateur.

3.14.2 AC Side Grounding of Typical Shore Based Installation

3.14.2.1 EVO-1212F and EVO-1224F: AC Side Grounding of Typical Shore Based Installation

Refer to the Installation Diagram for Typical Shore Based Installation for EVO-1212F and EVO-1224F at Fig 3.12.

(a) **AC Input Grounding:** The metal chassis of EVO™ gets bonded to the Grounding Electrode (GE) / Ground Rod of the premises as follows:

- The metal chassis of EVO™ is connected to the Grounding Pin (G) of the AC Power Inlet Plug (9)
- The Grounding Pin (G) of the AC Power Inlet Plug (9) gets connected to the Grounding Bus Bar (G-B) in the Grid Electrical Panel through the grounding wire of AC input connection
- The Grounding Bus Bar (G-B) in the Grid Electrical Panel is bonded to Earth Ground through the Grounding Electrode (GE) / "Ground Rod" of the premises.

(b) **AC Output Grounding:** The metal chassis of the AC load(s) get connected to the Grounding Electrode (GE) / Ground Rod of the premises as follows:

- The metal chassis of the AC load(s) is connected to the Grounding socket (G) of the GFCI outlet (10) in EVO™ through the Grounding Conductor of the load connection
- Grounding socket (G) of GFCI outlet "10" in EVO™ is connected to the metal chassis of EVO™.
- The metal chassis of EVO™ is connected to the Grounding Pin (G) of the AC Power Inlet Plug (9)
- The grounding Pin (G) of the AC Power Inlet (9) gets connected to the Grounding Bus Bar (G-B) in the Grid Electrical Panel through the grounding wire of AC input connection
- The Grounding Bus Bar (G-B) in the Grid Electrical Panel is bonded to Earth Ground through the Grounding Electrode (GE) / "Ground Rod" of the premises

3.14.2.2 EVO-1212F-HW and EVO-1224F-HW: AC Side Grounding of Typical Shore Based Installation

Refer to the Installation Diagram for Typical Shore Based Installation for EVO-1212F-HW and EVO-1224F-HW at Fig 3.13

(a) **AC Input Grounding:** The metal chassis of EVO™ gets bonded to the Grounding Electrode (GE) / "Ground Rod" of the premises as follows:

- The metal chassis of EVO™ is connected to the "INPUT GND" Terminal (23) of the AC Input / Output Terminal Block (20) in EVO™
- The "INPUT GND" Terminal (23) of the AC Input / Output Terminal Block (20) in EVO™ gets connected to the Grounding Bus Bar (G-B) in the Grid Electrical Panel through the grounding wire of AC input connection
- The Grounding Bus Bar (G-B) in the Grid Electrical Panel is bonded to Earth Ground through the Grounding Electrode (GE) / "Ground Rod" of the premises

(b) **AC Output Grounding:** The metal chassis of the AC load(s) gets connected to the Grounding Electrode (GE) / "Ground Rod" of the premises as follows:

- The metal chassis of the AC load(s) is connected to the Grounding Bus Bar (G-B) of the Electrical Sub Panel for EVO™ Output
- Grounding Bus Bar (G-B) of the Electrical Sub Panel for EVO™ Output is connected to metal chassis of EVO™ through the "OUTPUT GND" Terminal (26) of the AC Input / Output Terminal Block (20) in EVO™.
- The metal chassis of EVO™ is connected to the "INPUT GND" Terminal (23) of the AC Input / Output Terminal Block (20) in EVO™
- The "INPUT GND" Terminal (23) of the AC Input / Output Terminal Block (20) in EVO™ gets connected to the Grounding Bus Bar (G-B) in the Grid Electrical Panel through the grounding wire of AC input connection
- The Grounding Bus Bar (G-B) in the Grid Electrical Panel is bonded to Earth Ground through the Grounding Electrode (GE) / "Ground Rod" of the premises

3.14.3 AC Side Grounding of Typical RV / Mobile Installation

3.14.3.1 EVO-1212F and EVO-1224F: AC Side Grounding of Typical RV / Mobile Installation

Refer to the Installation Diagram for Typical RV / Mobile Installation for EVO-1212F and EVO-1224F at Fig 3.14.

(a) **AC Input Grounding:** The metal chassis of EVO™ gets bonded to (i) the RV / Vehicle Chassis Ground when not connected to Grid Power and (ii) to the Grounding Electrode (GE) / Ground Rod of the Grid Power System of the premises when connected to Grid Power through the Grid Power Supply Cord as follows:

- The metal chassis of EVO™ is connected to the Grounding Pin (G) of the AC Power Inlet Plug (9)
- The Grounding Pin (G) of the AC Power Inlet Plug (9) gets connected to the Grounding Bus Bar (G-B) in the Electrical Panel of the RV / vehicle through the grounding wire of AC input connection.

- The Grounding Bus Bar (G-B) in the Electrical Panel of the RV / vehicle is bonded to the RV / Vehicle Chassis Ground. When the RV / vehicle is connected to the Grid through the Grid Power Inlet and Cord, the RV / Vehicle Chassis Ground gets bonded to the Earth Ground of the premises through the Grounding Electrode (GE) / "Ground Rod" of the premises of the Grid Power System supplying the RV / Vehicle .

(b) **AC Output Grounding:** The metal chassis of AC load(s) gets bonded to (i) the RV / Vehicle Chassis Ground when not connected to Grid Power and (ii) to the Grounding Electrode (GE) / Ground Rod of the Grid Power System of the premises when connected to Grid Power through the Grid Power Supply Cord as follows:

- The metal chassis of the AC load(s) is connected to the Grounding socket (G) of the GFCI outlet (10) in EVO™ through the Grounding Conductor of the load connection
- Grounding socket (G) of GFCI outlet "10" in EVO™ is connected to the metal chassis of EVO™.
- The metal chassis of EVO™ is connected to the Grounding Pin (G) of the AC Power Inlet Plug (9)
- The grounding Pin (G) of the AC Power Inlet (9) gets connected to the Grounding Bus Bar (G-B) in the Electrical Panel of the RV / vehicle through the grounding wire of AC input connection.
- The Grounding Bus Bar (G-B) in the Electrical Panel of the RV / vehicle is bonded to the RV / Vehicle Chassis Ground. When the RV / vehicle is connected to the Grid through the Grid Power Inlet and Cord, the RV / Vehicle Chassis Ground gets bonded to the Earth Ground of the premises through the Grounding Electrode (GE) / "Ground Rod" of the premises of the Grid Power System supplying the RV / Vehicle

3.14.3.2 EVO-1212F-HW and EVO-1224F-HW:

Refer to the Installation Diagram for Typical RV / Mobile Installation for EVO-1212F-HW and EVO-1224F-HW at Fig 3.15.

(a) **AC Input Grounding:** The metal chassis of EVO™ gets bonded to (i) the RV / Vehicle Chassis Ground when not connected to Grid Power and (ii) to the Grounding Electrode (GE) / Ground Rod of the Grid Power System of the premises when connected to Grid Power through the Grid Power Supply Cord as follows:

- The metal chassis of EVO™ is connected to the "INPUT GND" Terminal (23) of the AC Input / Output Terminal Block (20) in EVO™
- The "INPUT GND" Terminal (23) of the AC Input / Output Terminal Block (20) in EVO™ gets connected to the Grounding Bus Bar (G-B) in the Electrical Panel of the RV through the grounding wire of AC input connection
- The Grounding Bus Bar (G-B) in the Electrical Panel of the RV / vehicle is bonded to the RV / Vehicle Chassis Ground. When the RV / vehicle is connected to the Grid through the Grid Power Inlet and Cord, the RV / Vehicle Chassis Ground gets bonded to the Earth Ground of the premises through the Grounding Electrode (GE) / "Ground Rod" of the premises of the Grid Power System supplying the RV / Vehicle

(b) **AC Output Grounding:** The metal chassis of the AC load(s) gets bonded to (i) the RV / Vehicle Chassis Ground when not connected to Grid Power and (ii) to the Grounding Electrode (GE) / Ground Rod of the Grid Power System of the premises when connected to Grid Power through the Grid Power Supply Cord as follows:

- The metal chassis of the AC load(s) is connected to the Grounding Bus Bar (G-B) of the Electrical Sub Panel for EVO™ Output
- Grounding Bus Bar (G-B) of the Electrical Sub Panel for EVO™ Output is connected to metal chassis of EVO™ through the "OUTPUT GND" Terminal (25) of the AC Input / Output Terminal Block (20) in EVO™.
- The metal chassis of EVO™ is connected to the "GRID GND" Terminal (22) of the AC Input / Output Terminal Block (20) in EVO™
- The "INPUT GND" Terminal (23) of the AC Input / Output Terminal Block (20) in EVO™ gets connected to the Grounding Bus Bar (G-B) in the Electrical Panel of the RV / vehicle through the grounding wire of AC input connection
- The Grounding Bus Bar (G-B) in the Electrical Panel of the RV / vehicle is bonded to the RV / Vehicle Chassis Ground. When the RV / vehicle is connected to the Grid through the Grid Power Inlet and Cord, the RV / Vehicle Chassis Ground gets bonded to the Earth Ground of the premises through the Grounding Electrode (GE) / "Ground Rod" of the premises of the Grid Power System supplying the RV / Vehicle
- **Thus, in keeping with the NEC requirements, the AC Grounds of EVO™ and the Grid Electrical Panel will be bonded to the Earth Ground only at one single point at the Grid Electrical Panel feeding the EVO™.**

3.14.4 Switching Of Bonding Of Output Neutral To Chassis Ground

As required by NEC and UL Standard 458, automatic switching of bonding between the Output Neutral and Chassis Ground has been provided in EVO™ through "Output Neutral and Chassis Ground Bond Switching Relay" (RY2 in Fig 4.1). Switching is carried as follows:

- When operating as an inverter, the current carrying conductor of the Inverter Section that is connected to the Output Neutral terminal of the EVO™ is bonded to the metal chassis of EVO™ by the "Output Neutral to Chassis Ground Bond Switching Relay" (RY2 in Fig 4.1). As the metal chassis of EVO™ is in turn bonded to the Earth Ground (in shore installations) or RV Ground (chassis of the RV) or to the Boat Ground (DC Negative Grounding Bus Bar and the Main AC Grounding Bus Bar are tied together in a boat and this is called the "Boat Ground"), this current carrying conductor of the Inverter Section (connected to the Output Neutral Terminal) will become the Grounded Conductor (GC) or the Neutral of the Inverter Section.
- When in Charging Mode, the Neutral conductor of the Grid power will be connected to the Output Neutral terminal of EVO™. At the same time, the "Output Neutral to Chassis Ground Bond Switching Relay" (RY2 in Fig 4.1) will unbond (disconnect) the Output Neutral connector of EVO™ from the metal chassis of EVO™. This will ensure that the Grounded Conductor (GC) i.e. the Neutral of the Grid power is bonded to the Earth Ground at one single point at the location of the AC Power Distribution System of the Marina / RV Park / Shore Power.
- **Disabling Neutral to Ground Bond**: In some applications, the Output Neutral of EVO™ may be required to remain isolated from the chassis/Ground at all times. For this, automatic Ouput Neutral to Chassis Ground bond can be disabled by disconnecting the Insulated Male/Female Quick Disconnect located in the AC wiring compartment. [Please see (i) 27, Fig 3.9.2(a) and (ii) "27" in Figs 4.1].

Please read the following on-line White Papers for more details at www.samlexamerica.com (Home > Support > White Papers):

- **"Neutral to Ground Switching in RV and Marine Applications**

3.15 BATTERY TEMPERATURE SENSOR FOR LEAD ACID BATTERIES

Lead Acid Battery charging voltages are required to be compensated based on the temperature of the battery cells. Hence, Battery Temperature Sensor Model EVO-BCTS has been provided. Please see constructional and fitment details at [Fig 2.5(a)] and [Fig 2.5(a)] respectively.

The sensor head contains a Negative Temperature Coefficient (NTC) Resistor with 2 output wires: "NTC+" is connected to Pin 4 of the RJ-45 Plug and "NTC -" is connected to Pin 5 of the RJ-45 Plug. The RJ-45 Plug is required to be connected to the RJ-45 Jack (6, Fig 2.1). The Temperature Sensor is used to ensure optimum charging of Lead Acid Batteries by modifying the charging voltages based on the battery temperature. In addition to compensating Absorption, Float and Equalization voltages, the voltage thresholds of parameters "LOW VOLTAGE ALARM", "BATTERY LOW VOLTAGE", "RESET VOLTAGE", "BATTERY OVER VOLTAGE" and "RESET TO BULK" are also temperature compensated. Temperature compensation will be carried out over temperature range of -20°C to +60°C. Table 6.2 shows the programmable range. Default setting for the Temperature Coefficient of Voltage is -4mV/°C/Cell.

3.16 INSTALLING CONTROL INPUT WIRING FROM LITHIUM BATTERY MANAGEMENT SYSTEM (BMS)

The Battery Charger Section is designed to charge either Lead Acid Batteries or Lithium Batteries.

Lead Acid Battery charging voltages are required to be compensated based on the temperature of the battery cells. Hence, Battery Temperature Sensor is required to be connected to the RJ-45 Jack (6, Fig 2.1) as explained at Section 3.15.

Charging voltages of Lithium Battery are not affected by temperature and hence, Battery Temperature Sensor is not required to be used.

For charging Lithium Battery, programmable parameter "BATTERY TYPE" has to be changed from **Setting 0=Lead Acid** (Default setting) to **Setting 1=Lithium**. This programming change is carried out using optional Remote Control EVO-RC Plus. Pease refer to the following Sections of EVO-RC-PLUS Manual:

- Screen 22 in Fig 4.2 and Table 4.3
- Section 4.4.2.22

Pins 4 and 5 of the RJ-45 Jack marked "Battery Temp. Sensor" (6 and 19, Fig 2.1) are required to be connected to the Normally Open Contacts of relay in the Battery Management System (BMS) of the Lithium Battery for "Stop Charging or "Stop Inverting" signals. The BMS will close the Relay contacts as follows:

- To "Stop Charging": Due to (i) overvoltage of individual cell / overall battery pack, or (ii) over temperature of individual cell or overall battery pack
- To "Stop Inverting": Due to deep discharge to the level of Low Battery Cut Off Voltage

When the Relay contacts in the BMS close, Pins 4 and 5 of RJ-45 Jack will be shorted. The following actions will be activated:

- **EVO in Charging Mode**: The charging will stop (charging current will be reduced to 0A). The 2nd Line of the Charging Mode Screens shown in the Menu Map for Charging Mode Screens (Fig 3.7 in EVO-RC Plus Manual) will show "Charger Off by BMS" as shown in example below for Screen No. 1

Screen 1

```
EVO-1212F     Charging
Charger Off by BMS
Battery 12.00V   0.0A
External         0.0A
```

- **EVO in Inverting Mode**: Inverting will stop. EVO™ will go to Standby Mode. The right half of the 1st Line of the Standby Mode Screens shown in the Menu Map for Standby Mode Screens (Fig 3.8 in EVO-RC Plus Manual) will show "Inv stop by BMS" in 2 consecutive displays - first "Inv stop" and then "by BMS" as shown in example below:

Screen 1 For 2 sec

```
EVO-1212F     Inv stop
AC Output:       0.00V
                <0.10A
               00.00Hz
```

Screen 1 For 2 sec

```
EVO-1212F     by BMS
AC Output:       0.00V
                <0.10A
               00.00Hz
```

3.17 SHORE BASED INSTALLATION

3.17.1 Typical Shore Based Installation

Fig. 3.12 illustrates a typical shore based installation for EVO-1212F / EVO-1224F. Fig 3.13 illustrates typical shore based installation for EVO-1212F-HW / EVO-1224-HW.

- Battery is connected to the DC input connections through DC Electrical Panel with an appropriate fuse to protect the DC input cables against short circuit
- Battery Charger Temperature Sensor Model EVO-BCTS is installed on the Positive or Negative post of the battery and connected to the RJ-45 Jack for the Temperature Sensor
- Supplementary battery charging is being carried out through a solar array and a Charge Controller connected to the DC input provided for external charge controller.
- AC input to the EVO™ is fed from the Grid. Alternatively, AC input may be fed from a generator.
- AC output from the EVO™ is fed to the AC Electrical Sub-Panel for EVO™

WARNING!

In case generator is used to feed AC input to the EVO, the following should be ensured:

- Ensure that the Neutral of the generator is bonded to the chassis of the generator. Please see Section 3.14.1 for details.
- If the Generator is a 120VAC / 240VAC Split Single Phase with 120 VAC phase fed to the EVO™, then both 120 VAC Split Phases of the generator should be equally loaded (balanced) to prevent deterioration of regulation of generator's output voltage / frequency. Poor regulation of generator output voltage / frequency may lead to interruption of charging / AC pass through in the EVO™ (EVO will transfer to Inverting Mode).

MISE EN GARDE!

En cas générateur est utilisé pour l'alimentation d'entrée AC à l'EVO, les dispositions suivantes devraient être prises :

- *S'assurer que le neutre du générateur est fixé sur le châssis du générateur. Veuillez voir la section 3.14.1 pour plus de détails.*
- *Si le générateur est un 120 VAC / 240 VAC monophasé avec Split 120VCA alimenté phase à l'EVO, puis les deux phases de 120 V C.A. Split le générateur devrait être tout aussi chargé (équilibré) afin de prévenir la détérioration du règlement de générateur&# 039;s fréquence/tension de sortie. Une mauvaise régulation de tension / fréquence de sortie du générateur peut conduire à l'interruption de la charge / AC passer à travers dans l'EVOTM (EVO va transférer à l'inversion de mode).*

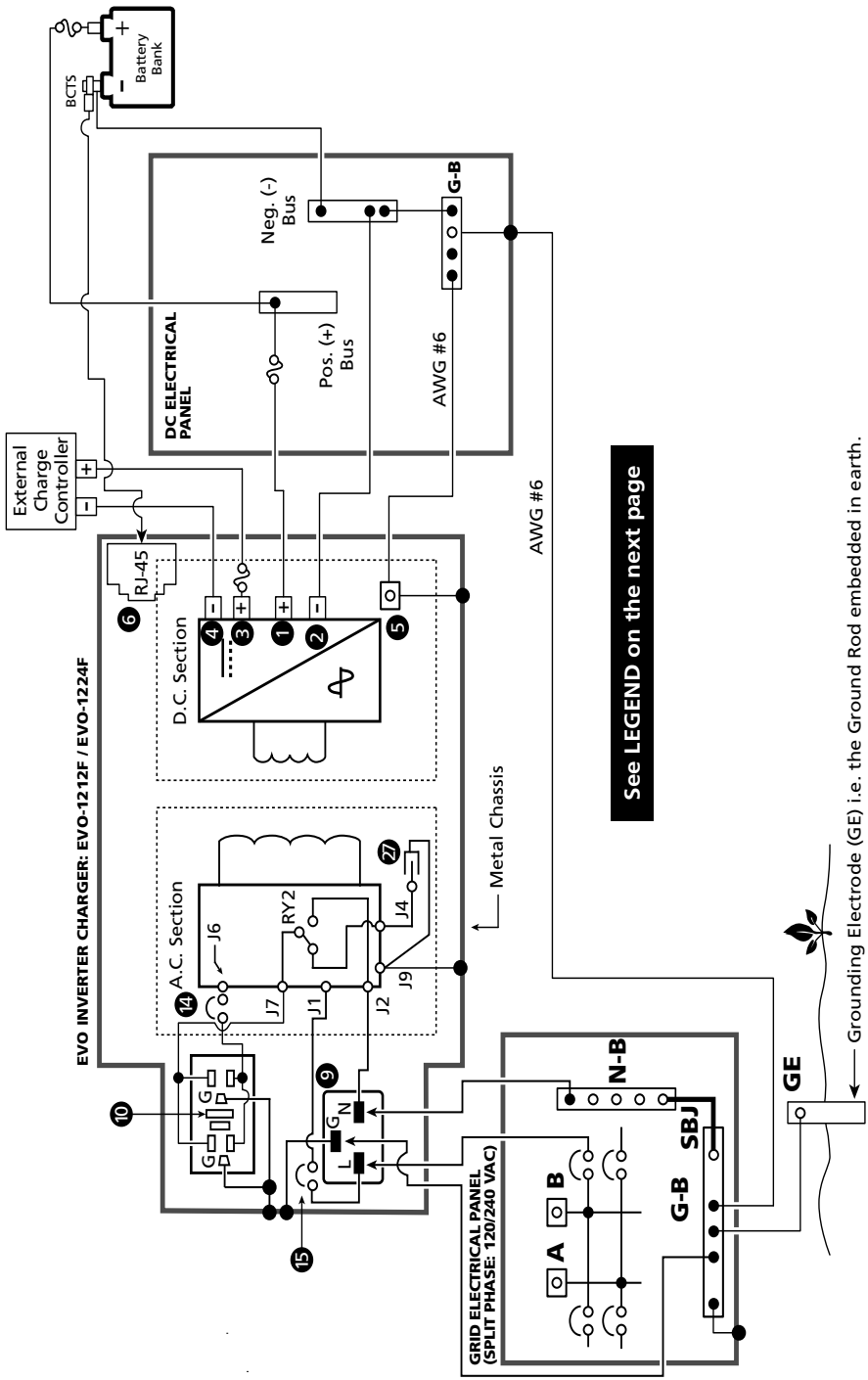

Fig 3.12 Installation Diagram for Typical Shore Based Installation for EVO-1212F and EVO-1224F

LEGEND for Fig 3.12

NOTE:
For sizing of wiring and fuses, refer to the following:
(a) DC side wiring: Table 3.1
(b) AC side wiring: Table 3.2

L. Line Terminal
L-B. Line Bus Bar
N. Neutral Terminal
N-G. Neutral to Ground Bond
N-B. Neutral Bus Bar
G-B. Grounding Bus Bar
SBJ. System Bounding Jumper
J1, 2, 4, 7, 9 Male Tab Terminals on internal Circuit Board
RY2. Relay for Neutral to Ground Bond Switching (Section 4.4.2)
BCTS. Battery Charger Temperature Sensor EVO-BCTS [Fig 2.5(a)]
1. Battery Positive Input Connector (1, Figs 2.1 / 3.8)
2. Battery Negative Input Connector (2, Figs 2.1 / 3.8)
3. Positive Input Connector for External Charge Controller (3, Figs 2.1 / 3.8)
4. Negative Input Connector for External Charge Controller (4, Figs 2.1 / 3.8)
5. DC Side Grounding Terminal on EVO™ (5, Figs 2.1 / 3.8)
6. RJ-45 Jack for Temperature Sensor (6, Fig 2.1)
GE. Grounding Electrode. Also called "Ground Rod"
9. 20A Inlet Plug Connector IEC 60320 C20 ((9, Fig 2.1)
10. NEMA5-15 Duplex GFCI Outlets (10, Fig 2.1)
14. 15A Built-in Breaker for AC output (14, Fig 2.1)
15. 20A Built-in Breaker for AC input (15, Fig 2.1)
27. "Quick Disconnect" to disconnect Neutral to Ground bond (27, Fig 3.9.2)

Circuit breaker

Fuse

A 120 VAC Leg, Phase A

B 120 VAC Leg, Phase B (180° out of phase with Phase A Leg)

WARNING!

In case a Generator is used to feed AC input, please ensure that the Neutral conductor of the Generator is bonded to the chassis / frame of the Generator. Please refer to Section 3.14.1 for details.

MISE EN GARDE!

En cas d'un générateur est utilisé pour envoyer de l'entrée CA, veuillez vous assurer que le conducteur neutre de la génératrice est collé sur le châssis / cadre de la génératrice. Veuillez vous reporter à la section 3.14.1 pour plus de détails.

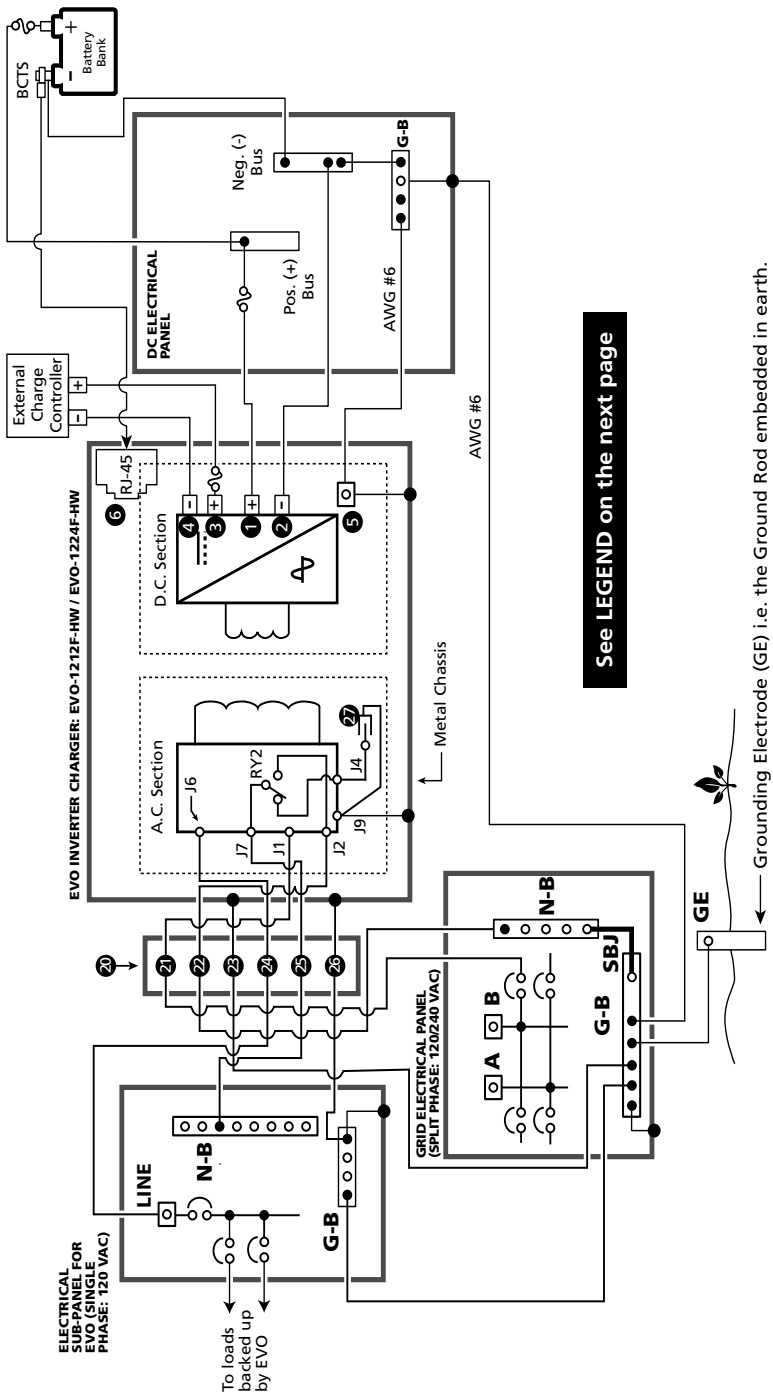

Fig 3.13 Installation Diagram for Typical Shore Based Installation for EVO-1212F-HW and EVO-1224F-HW

LEGEND for Fig 3.13

NOTE:
For sizing of wiring and fuses, refer to the following:
(a) DC side wiring: Table 3.1
(b) AC side wiring: Table 3.2 for AC input and Table 3.3 for AC output.

L. Line Terminal
L-B. Line Bus Bar
N. Neutral Terminal
N-G. Neutral to Ground Bond
N-B. Neutral Bus Bar
G-B. Grounding Bus Bar
SBJ. System Bounding Jumper
J1, 2, 4, 7, 9 Male Tab Terminals on internal Circuit Board
RY2. Relay for Neutral to Ground Bond Switching (Section 4.4.2)
BCTS. Battery Charger Temperature Sensor EVO-BCTS [Fig 2.5(a)]
1. Battery Positive Input Connector (1, Figs 2.1 / 3.8)
2. Battery Negative Input Connector (2, Figs 2.1 / 3.8)
3. Positive Input Connector for External Charge Controller (3, Figs 2.1 / 3.8)
4. Negative Input Connector for External Charge Controller (4, Figs 2.1 / 3.8)
5. DC Side Grounding Terminal on EVO™ (5, Fig 2.1)
6. RJ-45 Jack for Temperature Sensor (6, Fig 2.1)
GE. Grounding Electrode. Also called "Ground Rod"
20. AC Input / Output Terminal Block
21. INPUT L
22. INPUT N
23. INPUT GND
24. OUTPUT L
25. OUTPUT N
26. OUTPUT GND
27. Quick Disconnect to disconnect Neutral to Ground bond

Refer to AC Input / Output Connections for EVO-1212F-HW / 1224F-HW at Fig 3.9.2(a)

Circuit breaker

Fuse

A 120 VAC Leg, Phase A

B 120 VAC Leg, Phase B (180° out of phase with Phase A Leg)

WARNING!

In case a Generator is used to feed AC input, please ensure that the Neutral conductor of the Generator is bonded to the chassis / frame of the Generator. Please refer to Section 3.14.2 for details.

MISE EN GARDE!

En cas d'un générateur est utilisé pour envoyer de l'entrée CA, veuillez vous assurer que le conducteur neutre de la génératrice est collé sur le châssis / cadre de la génératrice. Veuillez vous reporter à la section 3.14.2 pour plus de détails

3.18 MOBILE INSTALLATION - GENERAL INFORMATION

3.18.1 GFCI Protection for Vehicle Application

When EVO-1212F-HW / EVO-1224F-HW is installed in vehicles, it is to be ensured that Ground Fault Circuit Interrupter(s) [GFCI] are installed in the vehicle wiring system to protect all branch circuits. EVO-1212F and EVO-1224F come with Duplex GFCI, NEMA5-15 outlet.

WARNING!

Please ensure that when using hard-wired versions EVO-1212F-HW, Ground Fault Circuit Interrupter(s) [GFCI] are installed in the vehicle wiring system to protect all branch circuits. GFCIs listed in Table 1.5 have been tested to operate satisfactorily and are acceptable.

MISE EN GARDE!

Veuillez vous assurer que lors de l'utilisation de versions câblées EVO-1212F-HW, Disjoncteur(s) [FUITE] sont installés dans le système de câblage du véhicule pour protéger tous les circuits de dérivation.
Des disjoncteurs de terre ci-dessous ont été testé. Leur fonctionnement est acceptable, Table 1.5.

3.18.2 Requirement of Deep Cycle, Auxiliary Battery and Battery Isolator for Powering Inverters in Mobile Installations

Basic information on Lead Acid Batteries is given in Section 1.4 under "General Information - Lead Acid batteries". For details, read on-line White Paper titled “Batteries, Chargers & Alternator” at: www.samlexamerica.com (Home > Support > White Papers).

An RV / vehicle has Starter, Lighting and Ignition (SLI) battery. As explained in White Paper titled “Batteries, Chargers and Alternators”, SLI batteries are designed to produce high power in short bursts for cranking.

SLI batteries use lots of thin plates to maximize the surface area of the plates for providing very large bursts of current (also specified as Cranking Amps). This allows very high starting current but causes the plates to warp when the battery is cycled. Vehicle starting typically discharges 1%–3% of a healthy SLI battery’s capacity. The automotive SLI battery is not designed for repeated deep discharge where up to 80% of the battery capacity is discharged and then recharged. If an SLI battery is used for this type of deep discharge application, its useful service life will be drastically reduced. Hence, this type of battery is not recommended for the storage of energy for inverter applications. A second deep cycle auxiliary battery must be installed in the RV for powering the EVO™ (Deep cycle, auxiliary battery is shown in Figs 3.14 and 3.15).

When the second auxiliary deep cycle battery is used, a Battery Isolator is required that will allow parallel connection of the two batteries for charging when the alternator is ON and disconnecting the parallel connection when the alternator is stopped (Isolator is shown in Figs 3.14 and 3.15). The capacity of the Battery Isolator should be as follows:

- **For EVO-1212F / EVO-1212F-HW:** The maximum continuous DC current required is 152A. The capacity of the Battery Isolator should be more than 152A or more than the capacity of the alternator, whichever is higher.

- **For EVO-1224F / EVO-1224-HW:** The maximum continuous DC current required is 76A. The capacity of the Battery Isolator should be more than 76A or more than the capacity of the alternator, whichever is higher.

3.18.3 Requirement to Keep the Neutral Conductor of Shore Power Isolated From the Chassis Ground of the RV

As explained in on-line White Paper titled "Grounded Electrical Power Distribution System" at www.samlexamerica.com (Home > Support > White Papers), in the RV, the Neutral Bus Bar is NOT bonded to the Chassis of the RV. In the RV, the Neutral is floating with respect to the chassis of the RV. This is necessary for safety because if the Neutral was bonded to the chassis of the RV and if the Neutral and the Hot got reversed by mistake, the chassis of the RV will be at 120 VAC with respect to the Earth Ground. If a person standing on the Earth Ground touches the chassis of the RV, he will be fed with 120 VAC and will receive electrical shock!

3.18.4 Typical Mobile Installation

Fig 3.14 illustrates typical RV installation for EVO-1212F / EVO-1224F using 30A, 120VAC, Single Phase Service Inlet. Fig 3.15 illustrates typical RV installation for hard-wired versions EVO-1212F / EVO-1224-HW using 30A, 120VAC Single Phase Service Inlet:

- Auxiliary Battery is connected to the DC input connections through an appropriate fuse to protect the DC input cables against short circuit
- When AC input from the Grid is not available, the Auxiliary battery will be charged by the alternator through the Battery Isolator
- Battery Charger Temperature Sensor Model BCTS-EVO is installed on the Positive or Negative post of the auxiliary battery and connected to the RJ-45 Jack for the Temperature Sensor
- Supplementary battery charging is being carried out through a solar array and a Charge Controller connected to the DC input provided for external battery charger
- AC input to the EVO™ is fed from the Electrical Panel of the RV (through suitable breaker).
- If the RV has a 50A Service, 120VAC Single Phase input to the EVO™ can be fed from either of the 2 Split Phase Legs of the 50A RV Panel (through suitable breaker).
- AC output from the EVO™ is fed to the Electrical Sub-Panel for EVO™ (Use 120V version and NOT 120/240 Split Phase version of the Electrical Sub-panel)

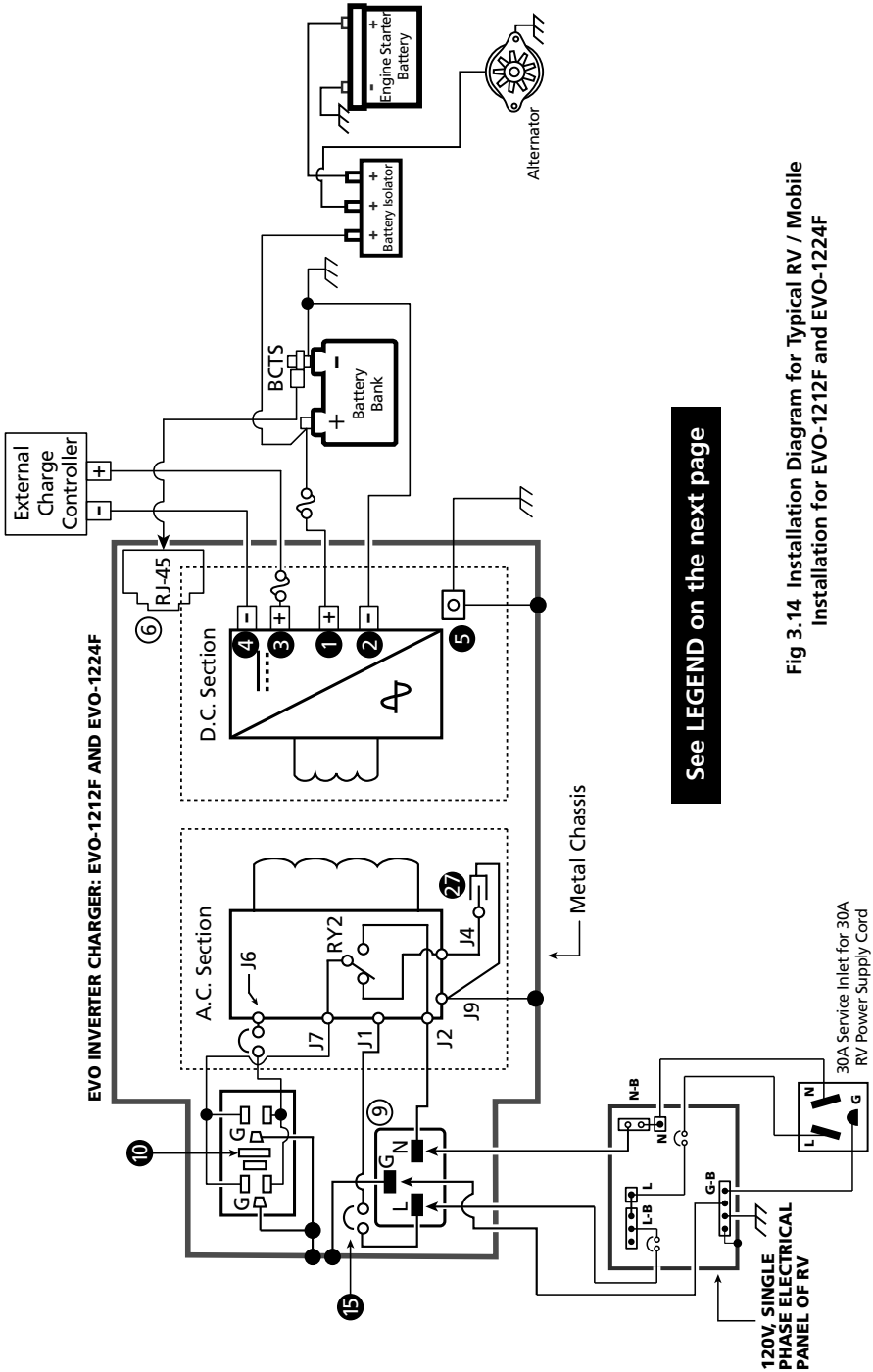

Fig 3.14 Installation Diagram for Typical RV / Mobile Installation for EVO-1212F and EVO-1224F

LEGEND for Fig 3.14

NOTE:
For sizing of wiring and fuses, refer to the following:
(a) DC side wiring: Table 3.1
(b) AC side wiring: Table 3.2

L. Line Terminal
L-B. Line Bus Bar
N. Neutral Terminal
N-G. Neutral to Ground Bond
N-B. Neutral Bus Bar
G-B. Grounding Bus Bar
SBJ. System Bounding Jumper
J1, 2, 4, 7, 9 Male Tab Terminals on internal Circuit Board
RY2. Relay for Neutral to Ground Bond Switching (Section 4.4.2)
BCTS. Battery Charger Temperature Sensor EVO-BCTS [Fig 2.5(a)]
1. Battery Positive Input Connector (1, Figs 2.1 / 3.8)
2. Battery Negative Input Connector (2, Figs 2.1 / 3.8)
3. Positive Input Connector for External Charge Controller (3, Figs 2.1 / 3.8)
4. Negative Input Connector for External Charge Controller (4, Figs 2.1 / 3.8)
5. DC Side Grounding Terminal on EVO™ (5, Figs 2.1 / 3.8)
6. RJ-45 Jack for Temperature Sensor (6, Fig 2.1)
GE. Grounding Electrode. Also called "Ground Rod"
9. 20A Inlet Plug Connector IEC 60320 C20 (9, Fig 2.1)
10. NEMA5-15 Duplex GFCI Outlets (10, Fig 2.1)
14. 15A Built-in Breaker for AC output (14, Fig 2.1)
15. 20A Built-in Breaker for AC input (15, Fig 2.1)
27. "Quick Disconnect" to disconnect Neutral to Ground bond (27, Fig 3.9.2)

Circuit breaker

Fuse

A 120 VAC Leg, Phase A

B 120 VAC Leg, Phase B (180° out of phase with Phase A Leg)

WARNING!

In case a Generator is used to feed AC input, please ensure that the Neutral conductor of the Generator is bonded to the chassis / frame of the Generator. Please refer to Section 3.14.1 for details.

MISE EN GARDE!

En cas d'un générateur est utilisé pour envoyer de l'entrée CA, veuillez vous assurer que le conducteur neutre de la génératrice est collé sur le châssis / cadre de la génératrice. Veuillez vous reporter à la section 3.14.1 pour plus de détails.

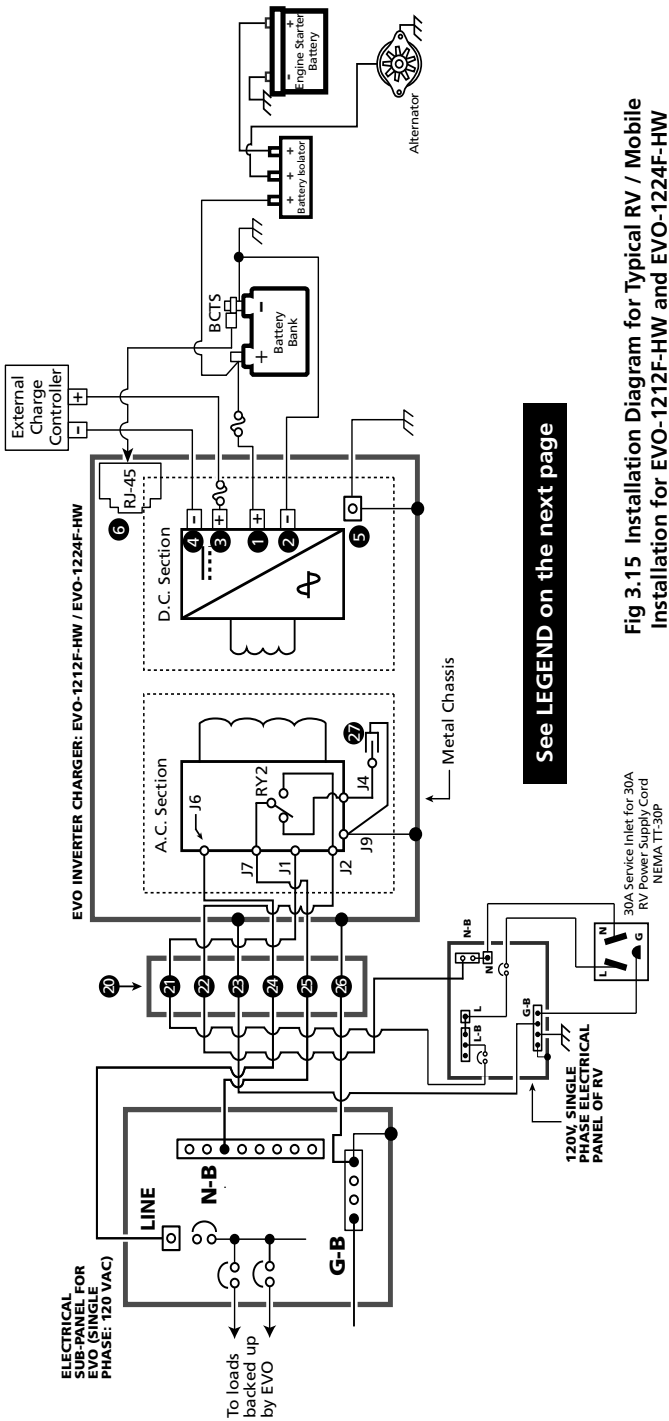

Fig 3.15 Installation Diagram for Typical RV / Mobile Installation for EVO-1212F-HW and EVO-1224F-HW

LEGEND for Fig 3.15

NOTE:
For sizing of wiring and fuses, refer to the following:
(a) DC side wiring: Table 3.1
(b) AC side wiring: Table 3.2 for AC input and Table 4.3 for AC output.

L. Line Terminal
L-B. Line Bus Bar
N. Neutral Terminal
N-G. Neutral to Ground Bond
N-B. Neutral Bus Bar
G-B. Grounding Bus Bar
SBJ. System Bounding Jumper
J1, 2, 4, 7, 9 Male Tab Terminals on internal Circuit Board
RY2. Relay for Neutral to Ground Bond Switching (Section 4.4.2)
BCTS. Battery Charger Temperature Sensor EVO-BCTS [Fig 2.5(a)]
1. Battery Positive Input Connector (1, Figs 2.1 / 3.8)
2. Battery Negative Input Connector (2, Figs 2.1 / 3.8)
3. Positive Input Connector for External Charge Controller (3, Figs 2.1 / 3.8)
4. Negative Input Connector for External Charge Controller (4, Figs 2.1 / 3.8)
5. DC Side Grounding Terminal on EVO™ (5, Fig 2.1)
6. RJ-45 Jack for Temperature Sensor (6, Fig 2.1)
GE. Grounding Electrode. Also called "Ground Rod"
20. AC Input / Output Terminal Block
21. INPUT L
22. INPUT N
23. INPUT GND
24. OUTPUT L
25. OUTPUT N
26. OUTPUT GND
27. Quick Disconnect to disconnect Neutral to Ground bond

Refer to AC Input / Output Connections for EVO-1212F-HW / 1224F-HW at Fig 3.9.2(a)

Circuit breaker

Fuse

A 120 VAC Leg, Phase A

B 120 VAC Leg, Phase B (180° out of phase with Phase A Leg)

WARNING!

In case a Generator is used to feed AC input, please ensure that the Neutral conductor of the Generator is bonded to the chassis / frame of the Generator. Please refer to Section 3.14.2 for details.

MISE EN GARDE!

En cas d'un générateur est utilisé pour envoyer de l'entrée CA, veuillez vous assurer que le conducteur neutre de la génératrice est collé sur le châssis / cadre de la génératrice. Veuillez vous reporter à la section 3.14.2 pour plus de détails

SECTION 4 | General Description & Principles of Operations

4.1 GENERAL DESCRIPTION

EVO™ is a Pure Sine Wave, Bi-directional, Single-Phase Inverter / Charger with a Transfer Relay that operates either as an inverter OR as a smart battery charger. It uses a common Converter Section that can work in two directions – in one direction it converts external AC input power to DC power to charge the batteries using Grid / Generator (Charging Mode) and in the other direction, it converts DC power from the battery to AC power (Inverting Mode). This allows the same power components to be used in both directions resulting in high-energy transfer efficiency with fewer components. Please note that it can NOT work in both the directions at the same time (i.e. it cannot work as an inverter and as a charger at the same time).

High performance 100 MHz DSP (Digital Signal Processing) type of micro-controller and Pulse Width Modulated (PWM) conversion circuits are used for the above implementation.

4.2 COMPONENTS OF THE SYSTEM

It consists of 3 Sections – Inverter Section, Battery Charger Section and AC Input/Transfer Relay Section. The unit is fed with the following inputs:

- 120 VAC / 60 Hz Grid input. Good quality Inverter Generator with stable 120 VAC / 60 Hz output may also be used if Grid is not available.
- DC Battery Source consisting of 12V/24V battery bank. - 4 versions of EVO™ are available. 2 versions for 12 VDC battery input (EVO-1212F and EVO-1212F-HW) & 2 for 24 VDC battery input (EVO-1224F and EVO-1224F-HW)
- Additional external charging source: Solar Charge Controller of up to 50A capacity. The output of the external Solar Charge Controller is routed through this unit and operates in parallel with the internal charger. The current delivered by the external charge controller is measured in real time. The internal charging current is controlled to ensure that the combined current fed to the battery does not exceed the programmed Bulk Charging Current. This improves the life of the battery. Please see Section 5.4 for more details.

4.3 INVERTER SECTION

The Inverter Section is a heavy-duty, continuous rated, DSP micro-controller based inverter generating a Pure Sine Wave output of 120 VAC, 60 Hz from the DC Battery Source. It is able to supply AC power to various types of AC loads such as resistive loads (heaters, incandescent lamps etc) or reactive loads (motors, air conditioners, refrigerators, vacuum cleaners, fans, pumps, Switched Mode Power Supplies (SMPS) used in audio / video equipment and computers, etc.).

4.3.1 Principle of working of Inverter Section

The low DC voltage from the DC Battery Source is inverted to the AC voltage in two steps. The low DC voltage from the DC Battery Source is first converted to low frequency (60 Hz), low voltage synthesized sine wave AC using an H-bridge configuration and high frequency PWM (Pulse Width Modulation) technique. The low frequency, low voltage synthesized sine wave is then stepped up to 120 VAC pure sine wave voltage using a low frequency Isolation Transformer and filtration circuit. This type of DC to AC inversion is called Hybrid Type – a combination of low frequency and high frequency implementation. Other distinctive features of the Inverter Section are given below:

Soft Start: The inverter design incorporates "Soft Start" feature with the following advantages and protections:

- When the unit powers up, it starts in Inverting Mode first. The output voltage ramps up gradually from around 48 VAC to 120 VAC in around 200 ms. This reduces otherwise very high starting inrush current drawn by AC loads like Switched Mode Power Supplies (SMPS) and motor driven loads like fans, pumps, compressors etc. This will result in lower motor inrush current (which typically can be up to 650% of the full load current of the motor), which means lesser mechanical stresses, wear and tear and increased lifetime of the motor, coupling and fan. Additionally, the impact on the load side components is greatly reduced, meaning less likelihood of causing problematic voltage drops during starting.

Power Surge – Up to 300%:

- The inverter is able to deliver very high surge power / current of up to 300% for 1 ms followed by 200% for 100 ms. This range of high instantaneous power is delivered at the rated voltage and hence, it is able to provide very high starting torque for difficult motor driven loads like compressors and pumps that require higher Locked Rotor Current during startup.
- If the power drawn by the load exceeds the above surge ratings, the inverter protects itself by limiting the load current to 300% / 200% which results in reduction of output voltage and consequent reduction in load current. The output voltage recovers automatically when power drawn by the load drops below the above surge limits

Power Boost up to 150%: Higher percentage of rated power can be provided for limited time periods as follows:

- 150% for 30 sec
- 140% for 1 min sec
- 120% for 10 min
- 110% for 30 min

4.4 TRANSFER RELAY SECTION

Transfer Relay Section is used to either feed AC power to the Battery Charger Section and at the same time, pass through the AC power from the external AC input power source to the load (As long as the external AC input power is available and is within the programmed limits of voltage and frequency) or to transfer the load to the Inverter Section (In case of loss of the external AC input power source or if this source is not within the programmed limits of voltage and frequency). Typical transfer time is 16 milliseconds from Grid/Generator to Inverter and <1ms from Inverter to Grid / Generator. Heavy duty 30A. Transfer Relay (RY1, Fig 4.1) is used for reliable transfer of up to 300% surge power. A separate Relay (RY2, Fig 4.1) is used for Neutral to Ground Bond Switching.

4.4.1 AC Transfer and Output Neutral To Chassis Ground Bond Switching

As required by NEC and UL Standard 458, automatic switching of bonding between the Output Neutral and Chassis Ground has been provided in EVO™ through "Output Neutral to Chassis Ground Bond Switching Relay" (RY2 in Figs 4.1). Switching of bonding is carried out as follows:

- When operating as an inverter, the current carrying conductor of the Inverter Section that is connected to the Output Neutral terminal of EVO™ is bonded to the metal chassis of EVO™ by the "Output Neutral to Chassis Ground Bond Switching Relay" (RY2 in Figs 4.1). As the metal chassis of EVO™ is in turn bonded to the Earth Ground (in shore installations) or to the RV Ground (chassis of the RV) or to the Boat Ground (DC Negative Grounding Bus Bar and the Main AC Grounding Bus Bar are tied together in a boat and this is called the "Boat Ground"), this current

carrying conductor of the Inverter Section (connected to the output terminal) will become the Grounded Conductor (GC) or the Neutral of the Inverter Section.

- When in Charging Mode, the Neutral conductor of the Grid power/Generator will be connected to the Output Neutral terminal of EVO™. At the same time, the "Output Neutral to Chassis Ground Bond Switching Relay" (RY2 in Figs 4.1) will unbond (disconnect) the Output Neutral connector of EVO™ from the metal chassis of EVO™. This will ensure that the Grounded Conductor (GC) i.e. the Neutral of the Grid power/Generator is bonded to the Earth Ground at one single point at the location of the AC Power Distribution System of the Marina/RV Park/Shore Power.
- **Disabling Neutral to Ground Bond**: In some applications, the Output Neutral of EVO™ may be required to remain isolated from the chassis/Ground at all times. For this, automatic Output Neutral to Ground bond can be disabled by disconnecting the Insulated Male/Female Quick Disconnect located in the AC wiring compartment of EVO-1212F-HW / 1224F-HW. [Please see (i) 27, Fig 3.9.2(a) and (ii) 27, Fig 4.1]. In EVO-1212F / 1224F, this Insulated Male / Female Quick Disconnect is accessible after opening the top cover of the unit.

Please read the following on-line White Papers for more details at www.samlexamerica.com (Home > Support > White Papers):

- **"Neutral to Ground Switching in RV and Marine Applications"**

4.4.2 Operation of Transfer Relay and Output Neutral to Chassis Ground Bond Switching Relay

Refer to Schematic at Fig 4.1.

The Bi-directional Transformer is used as follows:

- Feeds AC output from the Inverter Section when Grid power is not available.
- Feeds Grid / Generator power to the Battery Charger Section when Grid / Generator input is available.

Switching of Hot Output (OUTPUT LINE)

- 30A rated SPDT Relay RY1 (Fig 4.1) is used to switch the Hot Output Connector (**OUTPUT L**) to either the Inverter Section or to Grid / Generator.
- When Grid / Generator input Power is available, Relay RY1 (Fig 4.1) will be energized and contact 4 switches over to contact 5. The Bidirectional Transformer works as a battery Charger. The Hot AC input from Grid / Generator (INPUT L) is fed to the Hot input of the Bi-directional Transformer for battery charging and at the same time, it is passed through to the Hot Out (OUTPUT L) for powering the AC loads.
- When Grid / Generator power fails, Relay RY1 (Fig 4.1) will be de-energized and contact 4 switches back to contact 3. Output from the Inverter Section is fed to the Bi-directional Transformer and onwards to the Hot Out (OUTPUT L) for powering the AC loads.

Switching of Bonding of Output Neutral to Chassis Ground

- 30A rated SPDT Relay RY2 (Fig 4.1) is used to switch the bonding of the Output Neutral Connector (OUTPUT N) to the chassis of the unit
- When Grid / Generator input power is available, Relay RY2 (Fig 4.1) will be energized and contact 4 switches over to contact 5. Neutral input from Grid (GRID N) is fed to the Neutral input of the Bi-directional Transformer for battery charging and at the same time, it is passed through to the Output Neutral (OUTPUT N) for powering the AC loads. Please note that in this condition, the Output Neutral (OUTPUT N) is isolated from the chassis of the unit

- When Grid / Generator input power fails, Relay RY2 (Fig 4.1) will be de-energized and contact 4 switches back to contact 3. Neutral output from the Inverter Section is fed the Neutral of the Bi-directional Transformer and onwards to the output Neutral (OUTPUT N) for powering the AC loads. At the same time, the output Neutral (OUTPUT N) gets bonded to the metal chassis of the unit through the mated contacts of the Insulated Male / Female Quick Disconnect (27, Fig 4.1) located in the AC Wiring Compartment [27, Fig 3.9.2(a)] in EVO-1212F-HW / 1224F-HW. In EVO-1212F / 1224F, the Insulated Male / Female Quick Disconnect is accessible after opening the top cover of the unit.

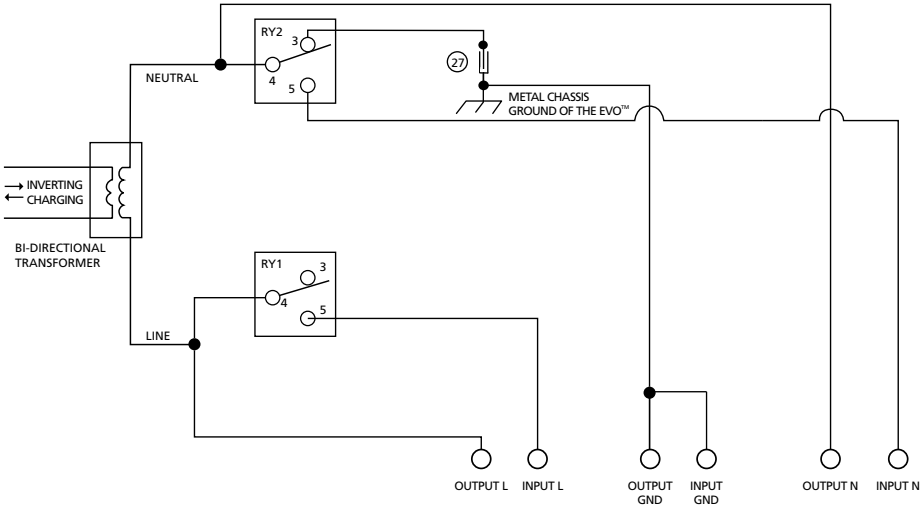

Fig 4.1 Operation of Transfer Relay and Neutral to Ground Bond Switching

LEGEND for Fig 4.1

RY1	Transfer Relay (30A) (Shown in de-energized state). Transfers the Line Conductor of the AC load to either the Line Conductor of the input from Grid / Generator or to the Line Conductor of the Inverter Section.
RY2	Relay (30A) for Neutral to Ground bond Switching
4, 3	Normally Closed Contacts (Shown in de-energized state)
4, 5	Normally Open Contacts (Shown in de-energized state)
27	Insulated Male / Female Quick Disconnect [27, Fig 3.9.2(a)] for disconnecting Output Neutral to Chassis Ground bond in Inverting Mode (Default - connected)

NOTE: Relays are de-energized in Inverting Mode and are energized in Charging Mode

4.4.3 Synchronized Transfer of Power – Inverter to AC Input Source

Assume that AC input power source (from Grid / Generator) is not available and the unit is working in "Inverting Mode".

When AC input power becomes available, its voltage and frequency are checked if these are within the programmed limits. If yes, the frequency and phase of the Inverter Section are

synchronized with the AC input source. This synchronization process takes few seconds. Once synchronization is completed, the load is transferred instantly (within 1 ms) to the AC input source at Zero Crossing of the voltage waveform for seamless transfer and for better protection of Transfer Relay contacts. The unit now operates in "Charging Mode". In "Charging Mode", AC input power from the Grid / Generator is used to charge the batteries and is also passed through to power the AC loads.

4.4.4 Synchronized Transfer From AC Input Source to Inverter

When the unit is operating in "Charging Mode" as described above, the phase and frequency of AC input power are tracked continuously. In case AC input power fails or is disconnected, the inverter will be forced into transfer at voltage which is at the same phase and frequency at which the AC input power had been disconnected. Load will be transferred to the inverter within 16ms at zero crossing. The unit will now work in "Inverting Mode" and the batteries will start discharging.

4.5 BATTERY CHARGER SECTION

The Battery Charger Section of these units provide 2/3/4 stage charging with 6 programmable charging profiles as detailed at Table 5.2, Section 5.6. The same Isolation Transformer and the H-Bridge configuration of the Inverter Section are used to work in the reverse direction, i.e. the AC input is stepped down and rectified to the programmed DC battery charging voltage using Pulse Width Modulation (PWM) Control. That is why it is called a Bi-directional device. Further, the charging voltages and currents are programmable to take care of a wide range of battery types like Lead Acid flooded, AGM, Gel Cell, Lead Calcium and Lithium.

Important battery charging features are as follows:

- Adaptive Charging Control
- Dynamic Input Power Diversion Control
- Parallel charging through External Charge Controller
- Temperature compensated charging
- Programmable Charging Profiles for Lead Acid and Lithium Batteries

Please see details under Section 5 titled "Battery Charging in Evolution™ Series".

4.6 MODES OF OPERATION

4.6.1 Charging Mode

As long as the external AC input power from the Grid/Generator is available and is within the programmed limits of voltage and frequency, it is passed through to the AC load through the Transfer Relay Section. At the same time, the Battery Charger Section converts the external AC input power from the Grid/Generator to DC power to charge the DC Battery Source.

4.6.2 Inverting Mode

If at any instant, the external AC input power from the Grid/Generator is interrupted or is not within the programmed limits of voltage and frequency, the Transfer Relay is de-energized and the load is transferred to the Inverter Section and internal battery charging is terminated. This is called the Inverting Mode.

4.6.3 Power Saving Mode

When the unit is operating without any load connected to it, it requires some minimum input power from the battery to keep all the sections inside the unit alive and ready to deliver power to the AC load as soon as the load is switched on. This power is called the "No Load Power Draw" or the "Idle Power" or "Self Power Consumption". The "No Load Power Draw" of these units in the

Normal Mode is around 20W. The EVO™ has a provision to minimize this "No Load Power Draw", if required (Applicable only when the unit is in "Inverter Mode"). This is achieved by enabling the "Power Saving Mode". **The unit is shipped in default "Disabled" condition i.e. Power Saving Mode will be NOT active.** Optional Remote Control EVO-RC-PLUS is required to enable this mode (Refer to Section 4.8.2.1 of the Owner's Manual for EVO-RC-PLUS). When this mode is enabled, the unit does not provide continuous output power. Pulsing output power consisting of only 3 cycles of reduced 48 VAC output voltage that are made available every 0.5 seconds is used to sense if a minimum load is present or not. **As continuous power is not being supplied, the "No Load Power Draw" is reduced to less than 8W.** If a load greater than the programmed value of "Wake-up Point" (Default – 7W) is sensed, the unit exits Power Save Mode and starts providing normal continuous output power. If the load drops to the programmed value of "Enter Point" (Default – 6W), the unit once again reverts to Power Saving Mode. Programmable and Default Values of "Enter Point" and "Wake-up Point" are shown in Table 6.6. Further details are available at Sections 4.8.2.1 to 4.8.2.3 of the Owners Manual for the Remote Control EVO-RC-PLUS.

Power Saving Mode should be disabled for the following loads:

- Low power loads that draw < 5W e.g. digital clocks, satellite receivers, phones / answering machines etc.
- Audio / video / computing devices that consume normal operating power > 50 W but draw less than 5W on entering Sleep Mode when switched off or when no activity is seen for a specified time.

4.6.4 Power Saving Mode - Transfer Characteristics in Grid

- **Transfer from AC input source to Inverter:** If qualified Grid / Generator AC input power is available (its voltage and frequency are within the programmed range), the Transfer Relay remains energized and the AC input power is passed through to the load and at the same time, the unit operates as a battery charger. If AC input power from Grid / Generator fails or is not qualified (its voltage and frequency are not within the programmed range), the Transfer Relay is de-energized and the load is transferred to the inverter. When this transfer takes place, the inverter initially operates in Normal Mode. If the AC load was greater than the programmed value of "Wake-up Point" (Default – 7W), the inverter continues in Normal Mode. However, if it sees a load less than the programmed value of "Enter Point" (Default – 6W) for around 5 sec, it enters Power Saving Mode.
- **Transfer from Inverter to A input source:** As soon as qualified AC input power from Grid / Generator is available, the inverter will exit Power Saving Mode and will switch over to Normal Mode. This switch over is necessary for synchronizing the AC output of the inverter with the AC input before transfer (Synchronization can not be carried out with pulsing wave form during Power Saving Mode). After synchronization is completed, the load is transferred to the Grid at zero crossing of the voltage waveform.

4.6.5 Normal (Off-Line), On-Line and Charger Only Modes

INFO

Description given below provides general capability of this function. For details of programming, please refer to sub-headings "ONLINE MODE" (Section 4.4.2.13) and "ONLINE OPTION" (Section 4.4.2.14) at Section 4.4 in the Owner's Manual for Remote Control Model EVO-RC-PLUS.

The EVO™ is able to operate in 3 modes – Normal (Off-line), On-line and Charger Only Modes. Normal (Off-line) Mode is the Default Mode. Mode can be changed to Online Mode or Charger Only Mode through optional Remote Control Model EVO-RC-PLUS **(Please see Section 4.4.2.13 in the Owner's Manual for EVO-RC-PLUS).**

Normal (Offline) Mode: This is the **Default Mode**. In this mode, the AC input (from the Grid / Generator) is the PRIMARY source of AC power and the batteries / Inverter Section of EVO™ is the BACK-UP source of DC-AC power. If qualified AC input (within the programmed voltage and frequency limits) is available, the Transfer Relay will be switched ON (energized), the EVO™ will operate in "Charging Mode" and qualified AC input from the Grid / Generator will be passed through to the AC output and at the same time, the Internal AC Charger will start charging the battery. If an external Solar Charge Controller is also connected to the External Charging Terminals (3 and 4, Fig 2.1), the internal AC Charger will limit the charging current to a value = (Programmed Value of "BULK CURRENT" – Value of Current fed from the external solar charge controller). When the Grid / Generator AC input fails or, is not within the programmed values of voltage and frequency, the Transfer Relay will be switched OFF (de-energized), the unit will change over to "Inverting Mode" and the AC Output will be fed from the internal Inverter Section. When Grid / Generator input is restored, the unit will revert back to "Charging Mode" to charge the batteries and at the same time, pass through the AC input to the AC output.

Online Mode: In this mode, the Inverter Section of the EVO™ is the PRIMARY DC-AC source of power. The Grid / Generator input is the BACK-UP source of AC power. **Online Mode has 2 options of operation (ONLINE OPTION) that can be programmed through optional Remote Control Model EVO-RC-PLUS (Please see Section 4.4.2.14 in the Owner's Manual for EVO-RC-PLUS)**. In this mode, even if qualified Grid / Generator AC input is available (within the programmed voltage and frequency limits), the EVO™ always operates in "Inverting Mode" and AC output is provided by the Inverter Section as long as the battery is in charged condition above the specified programmed value of low battery voltage (This specified value of low battery voltage is selected through programmable parameter "LOW VOLT ALARM" - See Section 4.4.2.8 in the EVO-RC-PLUS Manual). When the battery discharges to the programmed voltage threshold of "LOW VOLT ALARM", or lower and remains at this threshold, or below for a <u>sustained programmed time period</u>, the Transfer Relay will be switched ON (energized) and the EVO™ will change over to "Charging Mode" [The <u>sustained programmed time period</u> is selected using parameter called "GS DETECT TIME" (0-600 sec; Default 10 sec) - See Section 4.4.2.16 in the EVO-RC-PLUS Manual. On changing over to "Charging Mode", qualified AC input from the Grid / Generator is passed through to the AC Output and at the same time, the Internal AC Charger starts charging the battery. If an external Solar Charge Controller is also connected to the External Charging Terminals (3 and 4, Fig 2.1), the internal AC Charger will limit the charging current to a value = (Programmed Value of Charging Current – Value of Current fed from the external Solar Charge Controller). When the battery has been re-charged either fully through complete, 3-Stage Adaptive Charging algorithm (ONLINE OPTION: 0=Option 1 - See Section 4.4.2.14 in the EVO-RC-PLUS Manual) or, for a programmed specified time period (ONLINE OPTION: 1=Option 2 - See Section 4.4.2.14 in the EVO-RC-PLUS Manual), the Transfer Relay will be switched OFF (de-energized), charging will stop and the unit will change over to "Inverting Mode".

Online Mode is suitable for installations where both Grid and Photovoltaic (PV) Solar Battery Charging System are available. It is also desirable in areas where Grid / Utility Energy Rates are very high and use of supplementary battery based photovoltaic power system is more cost effective.

Charger Only Mode: In Off-grid DC powered homes, for efficiency consideration, all lighting and other loads / appliances are normally powered from 12V batteries that are primarily charged through solar / wind power. Generator backup is used for powering AC to DC battery charger for charging the batteries during extended periods of cloudy / no wind conditions. To meet this requirement, the EVO™ can be programmed to operate as a battery charger ONLY. Details are given below:

When "Charger Only" Mode is selected (ONLINE MODE: 2=Charger Only - See Section 4.4.2.13 in the EVO-RC-PLUS Manual), the EVO™ will operate as a battery charger to charge the batteries and pass through the AC input power to the loads as long as AC input is available (In DC powered homes, 120 VAC pass through will normally not be used as all the loads will be DC)

When AC input fails, the Inverter Section will NOT be activated and the EVO™ will operate in "Standby Mode" as long as AC input is NOT available. In "Standby Mode", the EVO™ draws extremely low power from the batteries (< 5W)

For further details, please refer to the following Sections of the EVO-RC-PLUS Manual:

- Section 4.1.3.1: Screen No. 13 of "Select Parameter Menu Map for Group 1 – CHARGE CURVE" at Fig 4.2
- Section 4.4.1: Screen No 13 of Table 4.3 for "Group 1 Parameter Set Up: CHARGE CURVE"
- Section 4.4.2.13: "Charger Only Mode" under ONLINE MODE

4.7 TEMPERATURE SENSOR FOR BATTERY CHARGING

Battery Charger Temperature Sensor Model EVO-BCTS (Fig 2.5) has been provided to ensure optimum charging by modifying the charging voltages based on temperature if the battery sees very wide temperature swings. Temperature compensation can be programmed with the help of optional Remote Control EVO-RC-PLUS (see Section 4.4.2.5 in EVO-RC-PLUS Manual). Range is -3 to -4 mv/ °C/cell (Default is -4 mv/ °C/cell). Without temperature compensation, the battery life is likely to be drastically reduced because the battery will be undercharged during cold conditions (will build up sulfation) or will be overcharged during hot conditions (will boil and lose excessive water). **Please read White Paper titled "Batteries, Chargers & Alternators" available online at www.samlexamerica.com (Home > Support > White Papers) and Section 5 titled "Battery Charging in EVO™ Series" for more details.**

4.8 PARALLEL OPERATION WITH EXTERNAL SOLAR CHARGE CONTROLLER

The Battery Charger Section is able to operate in parallel with external Solar Charge Controller with a charging capacity of up to 50 A. The output of the external charging source is routed through this unit and operates in parallel with the internal charger. The internal charging current is controlled to ensure that the combined current fed to the battery does not exceed the programmed Bulk Charging Current. This improves the life of the battery. Please see Section 5.4 for more details.

4.9 COOLING AND OVER TEMPERATURE PROTECTION

4.9.1 Cooling Fans

The unit is cooled by convection and by forced air cooling using 2 variable speed cooling fans. Temperature is sensed at the Power Transformer and H-Bridge Power Mosfets / Heat Sink. The fans will be switched ON at specified temperatures measured at the above sense points. The speed of the fans is increased as the temperature rises.

4.9.2 Over Temperature Protection

Refer to Fault Messages and Troubleshooting Guide at Table 7.1 of the Owner's Manual for Remote Control EVO-RC-PLUS. The unit goes to Fault Mode and shuts down due to over temperature sensed at the Main Power Transformer and the Heat Sink for the Power Mosfets: Fault messages and temperature thresholds for shut down and auto-reset are as follows:

- **"Transformer over heat!" :** Shut down at 150°C and auto-reset at 80°C
- **"Heat sink over heat!" :** Shut down at 70°C and auto-reset at 40°C

4.9.3 Automatic Reduction Of Charging Current In Higher Ambient Temperatures

In order to protect against over temperature shut down when operating in higher ambient temperatures of 50°C to 60°C, the BULK CURRENT setting is automatically reduced as follows based on temperature sensed at the Power Transformer and at the Heat Sink for the Power Mosfets:

- **Power Transformer:** In case the temperature is >130°C, the BULK CURRENT setting is reduced by 0.2% every 20 sec.
- **Heat Sink:** In case the temperature is >90°C, the charging current is reduced by 0.2% every 20 sec.

4.10 OPTIONAL REMOTE CONTROL EVO-RC-PLUS FOR PROGRAMMING OF MODES OF OPERATION AND PARAMETERS

Optional Remote Control Model EVO-RC-PLUS [Fig 2.4(a)] will be required for more advanced control and monitoring. Please see separate Owner's Manual for EVO-RC-PLUS. The Remote Control comes with 10M / 33 ft., RJ-45 Data Cable. The Remote plugs into RJ-45 Jack on the front panel of the unit (7, Fig 2.1). It has provision for Data Logging using SD Card of up to 16 GB (FAT16 / FAT32). It also has its own Real Time Clock and Super Capacitor Type of Internal Battery. The Remote Control will be required for Firmware upgrade through the SD Card.

Detailed messaging is available through its LCD display and LEDs. This remote will also be required for programming of various parameters to suit specific requirements. Each programmable parameter has a Default Value. **This unit has been shipped with the various parameters set at the Default Values. Programmable and Default values are shown in Tables 6.2 to 6.6.**

INFO

For background information on batteries and charging process, please read Section 1.4, "General Information - Lead Acid Batteries". All battery charging voltages are specified at battery temperature of 25°C / 77°F.

5.1 PRINCIPLE OF OPERATION OF BATTERY CHARGING SECTION

EVO™ Series is a Bi-directional Inverter / Charger with a Transfer Relay that operates either as an inverter OR as a battery charger. It uses a common Converter Section that can work in two directions – in one direction it converts external AC power to DC power to charge the batteries (Charging Mode) and in the other direction, it converts the DC power from the battery to AC power (Inverting Mode). PWM design is used for both the charging and inverting sections. Please note that it cannot work in both the directions at the same time (i.e. it cannot work as an inverter and as a charger at the same time). High performance, 100 MHz DSP (Digital Signal Processing) type of micro-controller and Pulse Width Modulated (PWM) conversion circuits are used for the above implementation.

When AC input power from Grid / Generator is available within the programmed limits of voltage and frequency, the internal Transfer Relay passes through the AC input to the AC loads and at the same time, the AC input is fed to the Battery Charger Section.

First, the AC input voltage is stepped down by the Low Frequency Isolation Transformer and is then rectified by 4 sets of H-Bridge Mosfets and fed to the batteries for charging. **When charging starts, the current does not rise sharply, but ramps up slowly to the full programmed Bulk Charge current.**

The Battery Charger Section of the EVO™ is a 2, 3 or 4 Stage Charger based on powerful, 100 MHz DSP micro-controller. Refer to Section 5.6 for details of operation.

5.2.1 Dynamic AC Input Current Diversion Control Between AC Pass Through Current And Battery Charging Current

EVO™ Models have very powerful Battery Charger Section that will require very high AC input current from the Grid (See Table 5.1).

TABLE 5.1 CHARGING CURRENTS AND PASS THROUGH LOAD CURRENTS

	Rated Charging Current		Maximum Pass Through Load Power and Current	
	Max. DC Side Charging Current	Equivalent AC Side Charging Current	Pass Through Power	Pass Through Amps
EVO-1212F and EVO-1212F-HW	60A	11.2A	1200 VA	10A
EVO-1224F and EVO-1224F-HW	40A	11.2A	1200 VA	10A

When batteries are being charged at or near the maximum value of charging current (See TABLE 5.1) and the pass through load current increases, the Grid / Generator supply circuit breaker may trip if the combined value of the AC side charging current (equivalent to the DC side charging current) and the pass through load current exceeds the Grid / Generator supply circuit breaker capacity. This situation is prevented by "Dynamic AC Input Current Diversion Control between AC Pass through Current and Battery Charging Current". This is accomplished through appropriate setting of programmable parameters "GRID MAX CURRENT". Optional Remote Control Model EVO-RC-PLUS will be required for the desired setting (Please refer to Section 4.5.2.2 of the EVO-RC-PLUS Owner's Manual).

"GRID MAX CURRENT" (Default = 20A) should be set equal to the Ampere rating of the external Grid / Generator supply breakers. During Battery Charging Mode, if the AC pass through load current is increased resulting in the net AC input current increasing to a value more than the programmed "GRID MAX CURRENT", the **EVO™ will automatically reduce the charging current to ensure that the equivalent AC Side Charging Current + Pass Through Load Current is not more than the set value of "GRID MAX CURRENT".**

INFO

If the AC side charging current has been automatically reduced to 0A and the pass through load current is still 1A more than the programmed value of the "GRID MAX CURRENT" for 5 sec, the EVO™ will shut down due to FAULT MODE and display "Input over current!"

EXAMPLE:

- Assume EVO-1212F is being fed with input supply circuit breaker capacity of 20A. The "GRID MAX CURRENT" setting = the Default value of 20A. The "BULK CURRENT" has been programmed at 60A (DC). When charging at 60A (DC), the corresponding AC side current draw will be 11.2A AC (Based on Conversion Factor of 1A DC side battery charging current = 0.19A AC side charging current).
- Assume that the AC pass through load is 5A. Total AC input current will be 16.2A (5AAC pass through load current + 11.2A AC side charging current corresponding to 60A DC side charging current) and will be below the set "GRID MAX CURRENT" of 20A.
- If now, the AC pass through load current is increased to say 12A, the total AC input current will be 23.2A (12A pass through load current + 11.2A AC side charging current corresponding to 60A DC side battery charging current). As the "GRID MAX CURRENT" is set at 20A, the AC input side charging current will be automatically reduced to 8A AC from 12A AC so that the total AC input current is limited to 20AAC. Correspondingly, the equivalent DC side battery charging current will reduce from 60ADC to 42.1ADC (at conversion factor of 1ADC side battery charging current = 0.19AAC side current).
- If now, the AC pass through load current is increased to say 22A, the total AC input current will be 30AAC (22AAC pass through load current + 8AAC AC side charging current corresponding to 42.1A DC side charging current) . The AC side charging current will be reduced from 8AAC (corresponding to 42.1A DC side charging current) to 0AAC (corresponding to 0A DC side charging current). However, now the AC input current will be 22AAC which in 2ACC more than the GRID CURRENT setting of 20AAC. After 5 sec, the EVO™ will shut down due to FAULT MODE and display "Input over current!" (AC input current was 2A more than the "GRID MAX" current setting of 20A for 5 sec)

5.2.2 Automatic Reduction Of Charging Current In Higher Ambient Temperatures

In order to protect against over temperature shut down when operating in higher ambient temperatures of 50°C to 60°C, the charging current is automatically reduced as follows based on temperature sensed at the Power Transformer and at the Heat Sink for the Power Mosfets:

- **Power Transformer:** In case the temperature is >130°C, the BULK CURRENT setting is reduced by 0.2% every 20 sec.
- **Heat Sink:** In case the temperature is >90°C, the BULK CURRENT setting is reduced by 0.2% every 20 sec.

5.3 ADAPTIVE CHARGING CONTROL FOR LEAD ACID BATTERIES WITH NO EXTERNAL DC LOAD ON THE BATTERIES

6 programmable "CHARGING PROFILES" are available (See Section 5.6 and Table 5.2).

For charging Lead Acid Batteries that do not have external DC loads connected to them, option is available for an automatic Adaptive Charging Algorithm to ensure that the battery is completely charged in a safe manner for longer battery life. (For programming information, refer to programming option "0 = 3 Stage Adaptive" for parameter "Charging Profile" under Section 4.4.2.21 in the EVO-RC-PLUS manual). In this algorithm, the time the battery remains in Absorption and Equalization Stages is proportional to the time the battery remains in the Bulk Charge Stage. A battery that is deeply discharged will remain in Bulk Stage for a longer duration and will require longer time in the Absorption and Equalization Stages for complete charging. On the other hand, a battery that is almost completely charged will remain in the Bulk Stage for a shorter duration and consequently, will remain in Absorption and Equalization stages for a shorter duration. This will prevent overcharging / boiling of the battery.
Note: In other inverter chargers that execute Absorption and Equalization Stages for a fixed time, a nearly fully charged battery may overcharge / boil and hence, will reduce battery life.

5.4 PARALLEL CHARGING USING EXTERNAL SOLAR CHARGER

The batteries feeding the EVO™ can also be charged using appropriately sized external solar charging system. The output of the solar panels will feed to an appropriately sized external Solar Charge Controller. Output of the external Solar Charge Controller is fed to the input terminals marked "EXT Charger" (3,4 in Fig 2.1). **Maximum charging current on these terminals is to be limited to 50A. This limit should not be exceeded!**

The charging current received from the external Solar Charge Controller is directly fed to the battery terminals (1,2 in Fig 2.1) through a series connected Hall-effect Current Sensing IC with integrated shunt. The value of this current is displayed as "External: x.xxA" on the optional Remote Control EVO-RC-PLUS (Please see display Screen No. 7 in Figs 3.1 to 3.4 of EVO-RC-PLUS manual).

The net Bulk Charging Current fed to the battery bank will, thus, be as follows:

- Net Bulk Charging Current fed to the battery bank= Adjusted Bulk Charging Current from the internal Battery Charging Section + Current available from the external Solar Charge Controller

Normally, Lead Acid batteries should not be charged at very high Bulk Charging Current as this will damage the batteries due to overheating and cell degradation. Normal Bulk Charging Current is in the range of 10% to 20% of the Ah capacity of the battery bank at C/20 Discharge Rate. Check with the battery manufacturer regarding recommended Bulk Charging Current for your battery bank. This value of "Bulk Charging Current" should be programmed as "BULK CURRENT" using the optional Remote Control EVO-RC-PLUS (Refer to Section 4.4.2.1 in the Owner's Manual for EVO-RC-PLUS).

The measured value of the charging current received from the external Solar Charge Controller is monitored by the control circuitry of the internal Battery Charging Section. The amount of Bulk Charging Current produced by the internal Battery Charging Section is adjusted in real time to satisfy the following condition:

- Internal Bulk Charging Current = Programmed Value of "BULK CURRENT" – External Charging Current

For example, if the "BULK CURRENT" in the EVO™ is programmed at say 40A and the external Solar Charge Controller is generating 15A, the internal Battery Charging Section will reduce its current from 40A to 25A so that the net charging current is equal to the programmed value of 40A.

In other Inverter Chargers where this design feature is not available and the Bulk Charging Current of the internal Battery Charger Section is fixed, the batteries are likely to be charged at high Bulk Charging Current = Fixed value of Bulk Charging Current from the internal Battery Charging Section + Current available from the External Charge Controller.

CAUTION!

Ensure that charging voltage related parameters of EVO™ like (i) ABSORP VOLTAGE (ii) EQUALIZE VOLTAGE (iii) FLOAT VOLTAGE and (iv) Temperature Compensation (COMPENSATE) are set / programmed to match the programmed parameters of the external charge controller. (Please refer to (i) Table 6.2, Section 6 and (ii) Sections 4.4.2.2 to 4.4.2.5 of the Owner's Manual for Remote Control EVO-RC-PLUS).

ATTENTION!

S'assurer que la charge de tension, les paramètres connexes d'EVO comme (i) LA TENSION D'ABSORPTION (ii) EQUALIZE VOLTAGE (iii) TENSION D'ÉGALISER et (iv) La compensation de température (COMPENSATE) est réglée / programmée pour correspondre aux paramètres programmés du contrôleur de charge externe. (Veuillez consulter (i) le tableau 6.2, section 6 et (ii) les sections 4.4.2.2 à 4.4.2.5 du manuel d'utilisation de la télécommande EVO-RC-PLUS).

5.5 BATTERY TEMPERATURE SENSOR

A Battery Temperature Sensor Model EVO-BCTS has been provided [Fig 2.5(a)]. It comes with 5 m / 16.5 ft cable. Connect the ring terminal end (houses the sensor) on the battery Positive or Negative post [Fig 2.5(b)]. Connect the RJ-45 plug to the Temperature Sensor Jack (6, Fig. 2.1). The Temperature Sensor is used to ensure optimum charging by modifying the charging voltages based on temperature if the battery sees very wide temperature swings. In addition to compensating ABSORPTION, EQUALIZE AND FLOAT voltages, the voltage thresholds of parameters "LOW VOLT ALARM", "BATT LOW VOLTAGE", "RESET VOLTAGE", "BATTERY OVER VOLT" and "RESET TO BULK" are also temperature compensated. Temperature compensation will be carried out over a temperature range of –20°C to + 60°C. Table 6.2 shows the programmable range. Default settings for the temperature coefficient is -4mV/°C/Cell.

5.6 CHARGING PROFILES

Option is available for 6 programmable charging profiles that are designed to cover various charging requirements for Lead Acid and Lithium Batteries. The profiles can be programmed using optional Remote Control EVO-RC Plus. Please refer to the following references in the manual for EVO-RC-PLUS:

- Menu Map for Parameter "CHARGING PROFILE" : Screen No. 21 of Fig 4.2 under Section 4.1.3.1
- Setup steps for Parameter "CHARGING PROFILE": Details under heading "CHARGING PROFILE" under Section 4.4.2.21

NOTE: 3 Stage Adaptive Charging Profile setting "0=3 Stage Adaptive" is the default charging profile applicable for Lead Acid Batteries (with no external DC loads on the battery)

Details of the 6 programmable charging profiles are given in TABLE 5.2 below.

CAUTION!

The Battery Management System (BMS) that comes with the type of Lithium Battery being used may need to have control over charging and discharging of the battery. For this, Pins 4 and 5 of the temperature Sensor Jack (6, Fig 4.1) may be used to feed potential free contact closing signal from the BMS to "Stop Charging" or "Stop Inverting" Refer to Section 5.12 for details.

ATTENTION!

Le système de gestion de la batterie (BMS) qui vient avec le type de batterie au lithium utilisé aura besoin d'avoir le contrôle de charge et décharge de la batterie. Pour cela, les broches 4 et 5 du capteur de température (6, Fig. 4.1) peut être utilisé pour l'alimentation contact libre de signal de fermeture de la RBE à "arrêter la charge" ou "Stop" inversion Se reporter à la Section 5.12 pour plus de détails.

TABLE 5.2 BATTERY CHARGER SECTION – CHARGING PROFILE OPTIONS AND CHARGING STAGES

Options under Parameter "CHARGING PROFILE"	Charging Stages	Battery Type and battery loading condition
0=3 Stage Adaptive (Default)	1. **Bulk Stage:** Charge at constant current equal to programmable parameter "BULK CURRENT" • Transition to Absorption Stage when voltage rises to programmable parameter "ABSORP VOLTAGE". 2. **Absorption Stage:** Charge at constant voltage at programmable parameter "ABSORP VOLTAGE". • **Adaptive Time Algorithm:** Time in Absorption Stage is computed automatically based on time in Bulk Stage. Transition to Float Stage thereafter. 3. **Float Stage:** Charge at constant voltage equal to programmable parameter "FLOAT VOLTAGE" • Reset to Bulk Stage under the following conditions: - After 10 days in Float Stage, or - Voltage drops to programmable voltage parameter "RESET TO BULK"	- Lead Acid: Flooded and sealed – AGM/Gel Cell - **ENSURE** that there are no other DC load(s) on the batteries. Load(s) on the battery may drain full or part of the charging current and will upset the "Adaptive Algorithm" for Absorption Stage time

TABLE 5.2 BATTERY CHARGER SECTION – CHARGING PROFILE OPTIONS AND CHARGING STAGES (CONTINUED)		
Options under Parameter "CHARGING PROFILE"	**Charging Stages**	**Battery Type and battery loading condition**
1 = 3 Stage Type 1	1. **Bulk Stage:** Charge at constant current equal to programmable parameter "BULK CURRENT" • Transition to Absorption Stage when voltage rises to programmable parameter "ABSORP VOLTAGE". 2. **Absorption Stage:** Charge at constant voltage at programmable parameter "ABSORP VOLTAGE". • Time in Absorption Stage is programmable through parameter "ABSORP TIME". Transition to Float Stage thereafter 3. **Float Stage:** Charge at constant voltage equal to programmable parameter "FLOAT VOLTAGE" • Reset to Bulk Stage under the following conditions: - After 10 days in Float Stage, or - Voltage drops to programmable voltage parameter "RESET TO BULK"	- Lead Acid: Flooded and sealed – AGM/Gel Cell - Lithium (See Section 5.6)
2 = 3 Stage Type 2	1. **Bulk Stage:** Charge at constant current equal to programmable parameter "BULK CURRENT" • Transition to Absorption Stage when voltage rises to programmable parameter "ABSORP VOLTAGE". 2. **Absorption Stage:** Charge at constant voltage at programmable parameter "ABSORP VOLTAGE". • Transition from Absorption to Float when current drops to programmable parameter "ABSORP EXIT AMPS" 3. **Float Stage:** Charge at constant voltage equal to programmable parameter "FLOAT VOLTAGE" • Reset to Bulk Stage under the following conditions: - After 10 days in Float Stage, or - Voltage drops to programmable voltage parameter "RESET TO BULK"	- Lead Acid: Flooded and Sealed – AGM/Gel Cell - Lithium (See Section 5.6)

TABLE 5.2 BATTERY CHARGER SECTION – CHARGING PROFILE OPTIONS AND CHARGING STAGES (CONTINUED)		
Options under Parameter "CHARGING PROFILE"	**Charging Stages**	**Battery Type and battery loading condition**
3 = 2 Stage Type 1	1. **Bulk Stage:** Charge at constant current equal to programmable parameter "BULK CURRENT" • Transition to Absorption Stage when voltage rises to programmable parameter "ABSORP VOLTAGE". 2. **Absorption Stage:** Charge at constant voltage at programmable parameter "ABSORP VOLTAGE". • Remain in Absorption Stage for programmable parameter "ABSORP TIME" • Switch OFF charging thereafter • Reset to Bulk Stage under the following conditions: - After 10 days in Float Stage, or - Voltage drops to programmable voltage parameter "RESET TO BULK"	Lithium (See Section 5.6)
4 = 2 Stage Type 2	1. **Bulk Stage:** Charge at constant current equal to programmable parameter "BULK CURRENT" • Transition to Absorption Stage when voltage rises to programmable parameter "ABSORP VOLTAGE". 2. **Absorption Stage**: Charge at constant voltage at programmable parameter "ABSORP VOLTAGE".	Lithium (See Section 5.6)

TABLE 5.2 BATTERY CHARGER SECTION – CHARGING PROFILE OPTIONS AND CHARGING STAGES (CONTINUED)		
Options under Parameter "CHARGING PROFILE"	**Charging Stages**	**Battery Type and battery loading condition**
Equalize -4 Stages 0 = No (Default) 1=Yes	1. **Bulk Stage**: Charge at constant current equal to programmable parameter "BULK CURRENT" • Transition to Absorption Stage when voltage rises to programmable parameter "ABSORP VOLTAGE". 2. **Absorption Stage**: Charge at constant voltage at programmable parameter "ABSORP VOLTAGE". • Adaptive Algorithm: Time in Absorption Stage is computed automatically based on time in Bulk Stage. Transition to Equalization Stage thereafter. 3. **Equalization Stage:** Charge at constant voltage at programmable parameter "EQUALIZE VOLTAGE". • **Adaptive Algorithm:** Time in Equalize Stage is computed automatically based on time in Bulk Stage. Transition to Float Stage thereafter. 4. **Float Stage:** Charge at constant voltage equal to programmable parameter "FLOAT VOLTAGE" • Reset to Bulk Stage under the following conditions: - After 10 days in Float Stage, or - Voltage drops to programmable voltage parameter "RESET TO BULK"	- Lead Acid: Flooded ONLY. ⚠ **CAUTION!** Sealed – AGM / Gel Cell are NOT equalized - **ENSURE** that there are no other DC load(s) on the batteries. Load (s) on the battery may drain full or part of the charging current and will upset the "Adaptive Algorithm" for Absorption and Equalization Stage times

5.7 3 STAGE CHARGING PROFILE

Refer to 3-Stage Charging Profile options in TABLE 5.2.

Fig. 5.1 shows the voltage and current charging curves with respect to time and different charging stages.

NOTE: *With the optional Remote Control Model EVO-RC-PLUS (see Owner's Manual), it is possible to program and activate 4 Stage Charging Mode including the 4th Equalization Stage. 4-Stage charging is required to be carried out only on flooded / wet cell batteries. This 4 Stage Charging Mode is discussed separately under "4 STAGE ADAPTIVE CHARGING PROFILE - EQUALIZE" at Section 5.8.*

5.7.1.1 Bulk Charge Stage

In the first stage, known as the "BULK" Charge Stage, the charger delivers the maximum "BULK CURRENT" ("Io") that has been programmed using optional Remote Control EVO-RC-PLUS (Refer to Section 4.4.2.1 of EVO-RC-PLUS manual). Range and Default value are shown at Table 6.2. This current is delivered to the batteries until the battery voltage approaches its Gassing Voltage i.e. Absorption Voltage which is typically around 14.4 volts for 12 volt batteries and 28.8 volts for 24 volt batteries. The desired value can be programmed using the optional Remote Control EVO-RC-PLUS (Refer to parameter "ABSORP VOLTAGE" in Table 6.2 and at Section 4.2.2.2 of EVO-RC-PLUS manual). The Bulk Charge Stage restores about 75% of the battery's charge. The Gassing Voltage is the voltage at which the electrolyte in the battery begins to break down into Hydrogen and Oxygen gases. Under normal circumstances, a battery should not be charged at a voltage above its Gassing Voltage (except in the manually selected Equalization Stage) since this will cause the battery to lose electrolyte and dry out over time.

This stage is displayed as "X-Bulk Stage" in the 2nd line of the Charging Mode screens in the Remote Control EVO-RC-PLUS. Character "X" denotes code for one of 6 of the Charging Profiles that is active. (For details, please see Table 3.2 at Section 3.6.4.2 of the Owner's Manual for EVO-RC-PLUS).

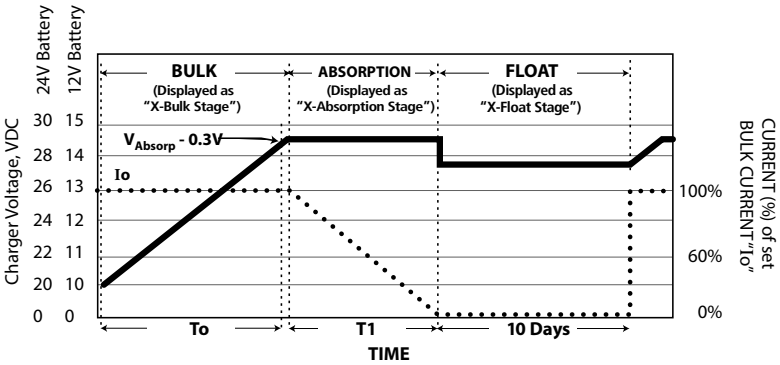

Fig 5.1 Charging Curves for 3 Stage Charging Profile

LEGEND for Fig 5.1

• • • • • Voltage Curve
▬▬▬ Current Curve

NOTE 1: The voltage curve shows the voltage output of charger. The intrinsic battery voltage may be different and will be proportional to the state of charge.

The value of the "BULK CURRENT" ("Io") depends upon the total Ampere Hour (Ah) capacity of the battery or bank of batteries. A battery should never be charged at very high charging current as very high rate of charging will not return the full 100 percent capacity as the Gassing Voltage rises with higher charging current. **As a general Rule of Thumb, the BULK CURRENT "Io" should be limited to 10% to 20% of the Ah capacity of the battery (20 Hr Rate).** Higher charging current may be used if permitted by the battery manufacturer.

Programmable range and Default values of "BULK CURRENT" ("Io") are shown in Table 6.2. The units are shipped with the "BULK CURRENT" set at the Default Value of 20A for EVO-1212F / EVO-1212F-HW and 15A for EVO-1224F / EVO-1224-HW.

When the unit enters Charging Mode, it starts working as a battery charger and the charger will run at full programmed "BULK CURRENT" until the charger reaches the programmed threshold of "ABSORP VOLTAGE".

For Adaptive Charging Profile Options (i) 0=3 Stage Adaptive and (ii) Equalize - 4 Stages (1=Yes) [See Table 5.2], a software timer will measure the time taken from the instant the unit enters the Bulk Charging Stage until the instant the battery voltage reaches 0.3V below the programmed "ABSORP VOLTAGE", then registers this time as Bulk Charge Time "To" and computes the Absorption Time "T1" as 10 times the Bulk Charge Time "To" in the internal "T1 Timer" i.e. T1 = To x 10. The "T1 Timer" is used to determine the time the charging will take place in the next Absorption Stage in these 2 charging profiles.

5.7.1.2 Automatic Adjustments of Internal AC Charger Current When External Solar Charge Controller is Also Charging in Parallel

Please note that if an external solar charge controller is also used to charge the batteries at the same time in parallel with the internal AC charger of the unit, the charging current of the internal AC charger will be controlled so that the total charging current of the external charger and the internal charger is = the programmed "BULK CURRENT ("Io").

For example, if the programmed "BULK CURRENT ("Io") is say 40A and the charging current of the external charger is 30A, the internal AC charger will output only 10A (Programmed setting of 40A – external charging current of 30A = 10A). Similarly, if the programmed setting is say 30A and the external charger is 50A, the internal AC charger will **NOT** provide any charging.

Please refer to Section 5.4 for more details.

5.7.2 Absorption Stage

During the Absorption Stage, the "ABSORP VOLTAGE" is held constant near the Gassing / Absorption Voltage to ensure that the battery is further charged to the full capacity without overcharging. Programmable range and Default values of "ABSORP VOLTAGE" are shown in Table 6.2. Default value is 14.4V for EVO-1212F / EVO-1212F-HW and 28.8V for EVO-1224F / EVO-1224F-HW. For programming details, refer to Section 4.2.2.2 of the EVO-RC-PLUS manual. The Absorption Stage restores the remaining 25% of the battery's charge. The time the charger remains in the Absorption Stage is proportional to the depth of discharge of the battery. When the battery is more discharged, it will take longer time in the Bulk Charge Stage to reach the Gassing / Absorption Voltage.

For Adaptive Profile Options (i) 0=3 Stage Adaptive and (ii) Equalize-4 Stages (1=Yes) [See Table 5.2], the T1 Timer (explained above under Bulk Stage) computes the time of charging in this stage as follows:

- Absorption Time "T1" = Bulk Charge Time "To" x 10 ("To" = Time from entering Bulk Charge Stage till battery voltage rises to 0.3V below Absorption Voltage).
- The "T1 Timer" has minimum time of 1 hour and a maximum time of 12 hours.
- When the "T1 Timer" runs out, the charger will enter the next Float Stage.
- Programmable range and Default values of Absorption Voltage are shown in Table 6.2.

This stage is displayed as "X-Absorption Stage" in the 2nd line of the Charging Mode screens in the Remote Control EVO-RC-PLUS. Character "x" denotes code for one of 6 Charging Profiles that is active. (For details, please see Table 3.2 at Section 3.6.4.2 of Owner's Manual for EVO-RC-PLUS).

5.7.3 Float Stage

Float Stage is a maintenance stage in which the output voltage is reduced to a lower level, typically about 13.5 volts, (27 volts for 24V models) to maintain the battery's charge without losing electrolyte through gassing and also prevent corrosion of Positive plate by maintaining proper Positive Plate Polarization Voltage. Programmable range of values of "FLOAT VOLTAGE" are shown in Table 6.2. Default value is 13.5V for EVO-1212F / EVO-1212F-HW and 27.0V for EVO-1224F / EVO-1224F-HW. For programming refer to Section 4.4.2.3 of EVO-RC-PLUS Manual.

This stage is displayed as "Float" "X-Float Stage" in the 2nd line of the in the Charging Mode screens in the Remote Control EVO-RC-PLUS. Character "x" denotes code for one of 6 Charging Profiles that is active. (For details, please see Table 3.2 at Section 3.6.4.2 of Owner's Manual for EVO-RC-PLUS).

5.7.4 Automatic Resetting of Charging Cycle in 3 Stage Charging Profile

The charging cycle will be reset to the Bulk Stage as follows:

- If the AC input from the Grid / Generator is disconnected and is reconnected or the battery voltage drops below 12 VDC / 24 VDC (Default). Programmable range for this voltage is 10 to 13V for 12V battery and 20 to 26V for 24V battery (This parameter is called "RESET TO BULK". For programming information for this parameter, refer to Section 4.4.2.15 of EVO-RC-PLUS manual).
- If the charger remains in the Float Mode for 10 days.

5.8 4 STAGE ADAPTIVE CHARGING PROFILE - EQUALIZE

CAUTION!

4 stage Adaptive Charging Profile - Equalize should be used only on vented, flooded (non-sealed or "wet") batteries and not on sealed AGM / Gel Cell Lithium batteries and only as often as recommended by the battery manufacturer.

ATTENTION!

Étape 4 - Profil de charge adaptative égaliser ne doit être utilisé que sur l'évacuation, inondé (non-étanches ou "humide") et non sur les batteries AGM scellées / Gel cellules au lithium batteries et qu'aussi souvent que recommandé par le fabricant de la batterie.

4 Stage battery Charging Cycle is used in Adaptive Equalization Charging Profile (See Table 5.2). Equalization Profile is activated using optional Remote Control EVO-RC-PLUS [Refer to parameter "EQUALIZE-4STAGES" at Section 4.4.2.12 of EVO-RC-PLUS Owner's Manual. The "EQUALIZE-4STAGES" option is required to be set at 1=Equalize (4-stage)] If Remote Control EVO-RC-PLUS is not available, Equalize Cycle may be activated by presenting the On/Off Push Button on the front panel (11, Fig 2.1) for 1 sec. The cycle can be stopped prematurely by pressing the Push Button for 1 sec. See Section 5.10 for more dertails.

Equalization of the batteries is carried out periodically - normally once per month for battery under heavy duty service and every two to four months for battery under light duty service. As equalization is a deliberate overcharge of the battery for a specified time period, equalizing your flooded / wet cell batteries will reduce sulfation, stir up the electrolyte to remove stratification, equalize voltages of individual cells and thus, help reach and maintain the peak capacity of the battery.

Please read about the necessity and details of equalizing batteries under White Paper titled "Batteries, Chargers and Alternators," available online at www.samlexamerica.com (Home > Support > White Papers).

The 4 stages will be - Bulk, Absorption, Equalization, and Float. Equalization is desirable for the proper health of Wet Cell Batteries. "EQUALIZE VOLTAGE" is programmable through the optional Remote Control Model EVO-RC-PLUS (Refer to Section 4.2.2.3 of Owner's Manual for EVO-RC-PLUS). Programmable voltage range and default values are shown in Table 6.2.

Adaptive Equalization current and Equalization time are computed automatically. (See Section 5.9)

Fig 5.2 shows the voltage and current curves during the 4 stages of charging in this profile. When Equalization is activated (requires optional Remote Control Model EVO-RC-PLUS – see Section 5.9), the charger will first execute Bulk Stage followed by Absorption Stage. On completion of Absorption Stage, the charger will execute Equalization Stage. After completion of Equalization Stage, the charger will enter Float Stage. The stage transitions will thus be: Bulk Stage (Constant Current) ➔ Absorption Stage (Constant Voltage) ➔ Equalization Stage (Constant Voltage) ➔ Float Stage (Constant Voltage).

As part of the **Adaptive Equalisation Algorithm**, the charging profile in the Equalization Stage is based on time "**To"** which is the time the charger remains in the initial Bulk Stage. The charger will remain in the initial Bulk Stage for a longer duration when the battery is deeply discharged and for a shorter duration if the battery has a shallow discharge.

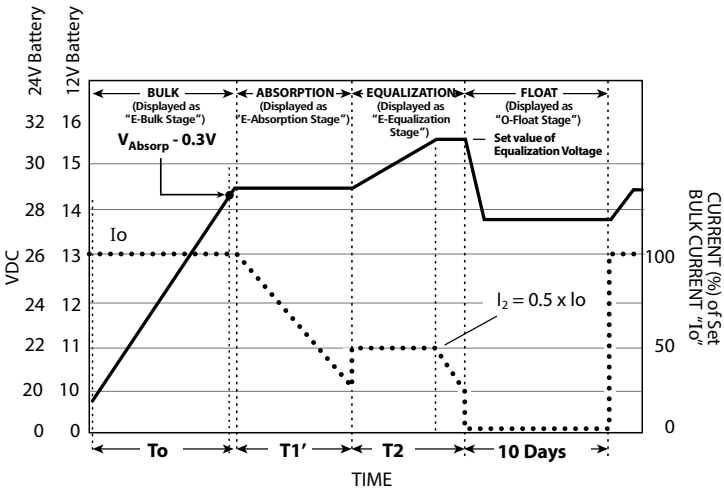

Fig 5.2 Charging Curve for 4 Stage Adaptive Charging Profile in Equalization Mode

LEGEND for Fig 5.1

▬▬▬ Voltage Curve
• • • • • Current Curve

NOTE 1: The voltage curve shows the voltage output of charger. The intrinsic battery voltage may be different and will be proportional to the state of charge.

CAUTION!

For effective equalization to take place, it is desirable that the batteries undergo a longer Bulk Stage applicable to the deeply discharged condition of the battery.

- **Please ensure that before the batteries are equalized, they should be deeply discharged to 20% of its capacity. The Standing Voltage (Terminal Voltage after disconnecting charging source[s] and load[s] for at least 3 hours) at 20% capacity will be:**
  - **12V Battery: Around 11.7V**
  - **24V Battery: Around 23.4V**
- **Do not equalize partially or fully charged batteries**

ATTENTION!

Pour une égalisation efficace, il faut que les batteries subissent à une étape majeure plus long en fonction de la condition déchargée de la batterie.

- ***Veuillez assurer que les batteries sont profondément déchargées (à 20% de sa capacité), avant de les égaliser. La tension constante (la tension de la borne après avoir déconnecter toutes sources de charge pour un minimum de 3 heures) quand elles sont déchargées à à 20% de sa capacité, serait:***
  - ***Une batterie de 12V: Environ 11,7V***
  - ***Une batterie de 24V: Environ 23,4V***
- ***N'égalisez pas des batteries qui sont partiellement ou complètement chargées***

5.9 DETAILS OF ADAPTIVE EQUALIZATION PROFILE CHARGING CYCLE (Fig 5.2)

- During the Bulk Stage, the charger will charge at the programmed "BULK CURRENT" ("Io") [see programmable range at Table 6.2. Default value is 20A for EVO-1212F / EVO-1212F-HW and 15A for EVO-1224F / EVO-1224F-HW]. "BULK CURRENT" ("Io") is normally limited to 10%-20% of the Ah capacity of the battery (20Hr Rate). Higher current may be used if permitted by the battery manufacturer in Equalization Mode. **The Bulk Stage is displayed as "E-Bulk Stage" in the 2nd line of the Charging Mode screens of the optional Remote Control EVO-RC-PLUS (Please refer to Table 3.2 at Section 3.6.4.2 of Owner's Manual for EVO-RC-PLUS).**
- A Software Timer is used to measure the time taken from the time the unit enters Bulk Stage until the battery charger reaches 0.3V below the Absorption Voltage, then registered this time as time To. The following times are computed based on the time To:
- Absorption Time T1′ = To x 0.5
- Equalization Time T2 is then computed based on the following logic:

  T2 = T1′ + 1 hr = 0.5 To + 1 hr ; if T1′ < 2 hrs
  T2 = T1′ + 2 hrs = 0.5 To + 2 hrs ; if 2 < T1′ < 4 hrs
  T2 = T1′ + 4 hrs = 0.5 To + 4 hrs ; if T1′ > 4 hrs
- When the battery reaches the programmed Absorption Voltage (see programmable range and defaults at Table 6.2), it transitions to the Absorption Stage and remains in this stage for the computed time T1′. **This stage is displayed as "E-Absorption Stage" in the 2nd line of the Charging Mode screens in Remote Control EVO-RC-PLUS (Please refer to Table 3.2 at Section 3.6.4.2 of Owner's Manual for EVO-RC-PLUS).**

- At the end of Absorption Stage, it transitions to the programmed "EQUALIZE VOLTAGE" (see programmable range and defaults at Table 6.2)**.** It remains in this stage for the computed time T2. **This stage is displayed as"E-Equalization Stage" in the 2nd line of Charging Mode screens in Remote Control EVO-RC-PLUS (Please refer to Table 3.2 at Section 3.6.4.2 of Owner's Manual for EVO-RC-PLUS).**
- The equalization current "I_2" is normally 5% to 10% of the Ah capacity of the battery. This current is indirectly computed from the programmed "BULK CURRENT" ("Io"). **As recommended under the Setting Mode for the Bulk Charge Current, the "BULK CURRENT" ("Io") is expected to be set at 10% to 20% of the Ah capacity of the battery.** Hence, the Equalization Current "I_2" will be automatically computed at 50% of the set "BULK CURRENT" ("Io") which will effectively amount to 5% to 10% of the Ah capacity of the battery. For example, the Equalization Current "I_2" for a 200 Ah capacity battery will be 10 A - 20A. The "BULK CURRENT" ("Io") for a 200 Ah capacity at 10% - 20% will be set at 20 A - 40A. The firmware will compute the Equalization Current "I_2" at 50% of 20 A (i.e. 10A) or at 50% of 40A (i.e. 20A).
- At the end of Adaptive Equalization Stage, the charger transitions to the programmed "FLOAT VOLTAGE" (see programmable range and defaults at Table 6.2)**. This stage is displayed as"O-Float Stage" in the 2nd line of the Charging Mode screens in Remote Control EVO-RC-PLUS (Please refer to Table 3.2 at Section 3.6.4 of Owner's Manual for EVO-RC-PLUS).**

Automatic Resetting of Charging Cycle
The charging cycle will be reset to the Bulk Stage of 3 Stage Charging Profile as follows:

- If the AC is reconnected or the battery voltage drops below 12 VDC / 24 VDC (Default). Programmable range for this voltage is 10 to 13V for 12V battery and 20 to 26V for 24V battery. This parameter is called "RESET TO BULK". Please see Table 6.2 and Section 4.2.2.15 of the EVO-RC-PLUS manual.
- If the charger remains in the Float Mode for 10 days.

5.10 SWITCHING ON AND SWITCHING OFF OF EQUALIZATION CHARGING PROFILE (4 STAGE CHARGING)

The default charging profile is 3 stage Adaptive Profile (See Table 5.2). Equalization Profile is required to be selected manually as follows:

- **Using ON/OFF Push Button (11, Fig 2.1) on the Front Panel (only if the Remote Control EVO-RC-PLUS is not available):** When the unit is in Charging Mode (qualified Grid / Generator Input is available), the Blue LED "ON" (12, Fig 2.1) will be flashing once per second. Press the ON/OFF Button for 1 second. The ongoing Charge Profile will be terminated and Adaptive Equalization will be initiated. The Blue LED "ON" (12, Fig 2.1) will start flashing 2 times per sec to show that Equalize "CHARGE MODE" is active. The unit will complete Equalization and terminate in the last stage of the charging profile that was active at the time the Equalize Profile was activated using the front panel On/Off Push Button (11, Fig 2.1). Henceforth, charging will continue in the initial charging profile that was active before equalization was initiated using the front panel On/Off Push Button (11, Fig 2.1). At the same time, the Charging Profile Setting will again be reset to the original and the Blue LED "ON" (12, Fig 2.1) will return to 1 flash per second. **To terminate Equalization Mode prematurely before its completion, press the ON/OFF Push Button for 1 second.**

If the unit was in Inverting Mode [Blue LED "ON" (12, Fig 2.1) steady] and the Mode is set to Equalization as above by pressing the ON/OFF Push Button for 1 second, the unit will undergo Equalization Mode whenever qualified AC input is available from Grid / Generator and the unit enters Charging Mode. To terminate Equalization Mode prematurely before its completion, press the ON/OFF Push Button for 1 second.

NOTE: Procedure described above is to be used when the optional Remote Control EVO-RC-PLUS has NOT been plugged into the RJ-45 Remote Control Jack (7, Fig 2.1). **Please note if the Remote Control has been plugged into the RJ-45 Jack, the above procedure cannot be activated and the ON/OFF of Equalization Mode will be controlled by the Remote Control EVO-RC-PLUS.**

- **Using Optional Remote Control EVO-RC-PLUS:** Please refer to the following Sections of the Owner's Manual for EVO-RC-PLUS:
  - Section 4.1.3.1, Fig 4.2, Screen No. 12 "EQUALIZE-4STAGES"
  - Section 4.4.2.12 , set up procedure for parameter "EQUALIZE-4STAGES" setting at "1=Yes"

5.11 TWO-STAGE CHARGING PROFILES

In 2-Stage Profile, the battery is charged in Bulk Stage first and then in Absorption Stage. There is no 3rd Stage. Please refer to Fig 5.1 for typical Voltage and Current Curves. Consider the curves for the Bulk and Absorption stages only.

NOTE: The 2nd Stage, i.e. "Absorption Stage" may also be referred to as "Float Stage" in some applications like in Lithium Battery charging, and charging Lead Acid batteries with load (battery backup applications) where the voltage setting of the 2nd Absorption stage is lowered to the level corresponding to Float Stage level.

There are 2 options for Charging Profiles for 2-Stage Charging – (i) Type 1 and (ii) Type 2. Please refer to Table 5.2 for details.

2-Stage Charging Profiles are typically used for charging Lead Acid Batteries with load (battery backup application) and for charging Lithium Batteries. Please refer to Section 5.12 below for details on charging Lithium Batteries

5.12 CHARGING LITHIUM BATTERIES

CAUTION!

The Battery Management System (BMS) that comes with the Lithium Battery being used may need to have control over charging and discharging of the battery. For this, Pins 4 and 5 of the Temperature Sensor Jack (6, Fig 2.1) may be used to feed potential free contact closing signal from the BMS to "Stop Charging" or "Stop Inverting. See details given below.

ATTENTION!

Le système de gestion de la batterie (BMS) qui vient avec la batterie au lithium utilisé peut avoir besoin d'avoir le contrôle de charge et décharge de la batterie. Pour cela, les broches 4 et 5 du capteur de température (6, figure 2.1) peut être utilisé pour l'alimentation contact libre de signal de fermeture de la RBE en "Stop" ou "arrêt de charge de l'inversion. Voir les détails donnés ci-dessous.

5.12.1 Charging Profiles for Lithium Batteries

There are 3 Charging Profiles available for charging Lithium Batteries: (i) 3 Stage Type 1, (ii) 2 Stage Type 1 and (iii) 2 Stage Type 2. Please refer to Table 5.2 for details

Charging voltages of Lithium Battery are not affected by temperature and hence, Battery Temperature Sensor [Fig 2.5(a)] is not required to be used.

5.12.2 Stop Charging and Stop Inverting Protections When Charging Lithium Batteries

As mentioned under CAUTION above, the Battery Management System (BMS) of the Lithium Battery may need to provide the following potential free, contact closure control signals to the Inverter Charger for battery protection:

- "Stop Charging" control signal (potential free, contact closure) to the Battery Charger Section to prevent (i) over voltage of individual cells / over voltage of the battery pack and (ii) over temperature of individual cells / over temperature of the battery pack
- "Stop Inverting" control signal (potential free, contact closure) to the Inverter Section so that the battery stops discharging to prevent deep discharge of the battery

Pins 4 and 5 of the RJ-45 Jack (6, Fig 2.1) can be programmed to accept the above potential-free relay contact closure signal from the BMS. In default condition, Pins 4 and 5 of the RJ-45 Jack (6, Fig 2.1) are programmed for temperature compensation for Lead Acid Batteries through battery temperature information received from Battery Charger Temperature Sensor EVO-BCTS. Parameter "BATTERY TYPE" is used to select one of the above 2 functions of the RJ-45 Jack (6, Fig 2.1) as follows:

Programming Parameter: "**BATTERY TYPE**" for selecting function of RJ-45 Jack marked "Battery Temp. Sensor" (6, Fig 2.1)	
Setting **0=Lead Acid** (Default)	Temperature compensation through battery temperature information from the Battery Charger Temperature sensor EVO-BCTS
Setting **1=Lithium**	Connect Pins 4 and 5 to potential free contacts of the BMS of the Lithium Battery

If the BMS of the Lithium Battery being used has the ability to provide potential-free relay contact closure signal for stopping of charging / inverting functions as described above, parameter "BATTERY TYPE" should be programmed for setting 1=Lithium as explained above.

For details of above programming, please refer to Section 4.2.2.22 of the EVO-RC PLUS Remote Control Manual.

When the contacts in the BMS close, Pins 4 and 5 of the RJ-45 Jack (6, Fig 2.1) will be shorted. The following actions will be activated:

- **EVO in Charging Mode:** Charging will stop (charging current will be reduced to 0A). The 2nd line of the Charging Mode Screens shown in the Menu Map for Charging Mode Screens (Fig 3.7 in EVO-RC-PLUS Manual) will show "Charger Off by BMS" as shown in the example below for Screen No. 1 for EVO-1212F:

Screen No. 1

```
EVO-1212F     Charging
Charger Off by BMS
Batt: 12.00V      0.0A
External:         0.0A
```

For more details, refer to Section 3.6.8 and Fig 3.7 of EVO-RC-PLUS Manual.

- **EVO in Inverting Mode:** Inverting will stop. EVO™ will go to Standby Mode. The right half of the 1st Line of the Standby Mode Screens shown in the Menu Map for Standby Mode Screens (Fig 3.1 in EVO-RC-PLUS Manual) will show "Inv stop by BMS" in 2 consecutive displays - first "Inv stop" and then "by BMS" as shown in example below for EVO-1212F:

"Inv stop" for 2 sec
"by BMS" for 2 sec

Screen No. 1

```
EVO-1212F     Inv Stop
Output:           0.00V
                 <0.10A
                 0.00Hz
```

5.13 CHARGER ONLY MODE

In Off-grid DC powered homes, for efficiency consideration, all lighting and other loads / appliances are normally powered from 12V batteries that are primarily charged through solar / wind power. Generator backup is used for powering AC to DC battery charger for charging the batteries during extended periods of cloudy / no wind conditions. To meet this requirement, the EVO™ can be programmed to operate as a battery charger ONLY. Details are given below

When "Charger Only" Mode is selected (ONLINE MODE: 2=Charger Only), the EVO™ will operate as a battery charger to charge the batteries and pass through the AC input power to the loads as long as AC input is available (In DC powered homes, 120 VAC pass through will normally not be used as all the loads will be DC)

When AC input fails, the Inverter Section will NOT be activated and the EVO™ will operate in "Standby Mode" as long as AC input is NOT available. In "Standby Mode", the EVO™ draws extremely low power from the batteries (< 5W)

For further details, please refer to the following Sections of the EVO-RC Plus Manual:

- Section 4.1.3.1: Screen No. 13 of "Select Parameter Menu Map for Group 1 – CHARGE CURVE" at Fig 4.2
- Section 4.4.2.13.2: "Charger Only Mode" under ONLINE MODE

SECTION 6 | Operation, Protections and Troubleshooting

BEFORE OPERATING THE UNIT, PLEASE ENSURE THAT THE UNIT HAS BEEN INSTALLED PROPERLY AS PER INSTRUCTIONS AT SECTION 3 OF THIS MANUAL.

PLEASE ENSURE THAT ALL SAFETY INSTRUCTIONS AT SECTION 1 OF THIS MANUAL ARE READ AND UNDERSTOOD BEFORE OPERATING THE UNIT.

INFO

a) Minimum battery voltage required for initiating *manual* switching ON of the unit is as follows:
- **12V units ----- Higher than 9V**
- **24V units ---- Higher than 18V**

b) Please note that this unit is designed to POWER ON AUTOMATICALLY if (i) AC voltage of 70V ± 5 VAC is available at the AC Input Terminals and (ii) DC input voltage is > 12V for EVO-1212F / EVO-1212F-HW and >24V for EVO-1224F / EVO-1224F-HW. If the AC input voltage and frequency are within the programmed limits, the unit will automatically operate in "Charging Mode". If the AC input voltage and frequency are not within the programmed limits, the unit will operate in "Inverting" Mode. Further, as long as AC input voltage > 70 ± 5 VAC is present, the unit CANNOT BE POWERED OFF using the ON / OFF Button on the front panel of the unit or on the optional Remote Control EVO-RC-PLUS. Switch OFF the AC input first if the unit is required to be powered off. However, if the unit is in "Fault Mode", it will be possible to power OFF the unit with the help of the ON/OFF Push Button.

c) Before proceeding, confirm that the unit is NOT in Standby Mode by pressing ON/ OFF Button briefly. (Standby Mode is used for Firmware upload through the optional Remote Control EVO-RC-PLUS.)
- **If LED marked "ON" (12, Fig 2.1) stays OFF, then unit is OFF.**
- **If this LED is ON or is flashing, the unit was in Standby Mode and is now ON**

6.1 POWERING ON USING ON/OFF BUTTON ON THE FRONT PANEL (11, Fig 2.1)

6.1.1 Powering ON the Unit: AC Input Switched OFF / Not Connected

- To power ON the unit, press and **hold** the ON/OFF Button (11, Fig 2.1) **for 2 seconds**. Blue LED marked "ON" (12, Fig 2.1) will flash 3 times, will go off momentarily and will then be steady Green. Now, release the ON/OFF Button. Subsequently, the lighting pattern of this LED will be controlled by various operating conditions given in Table 6.1

6.1.2 Powering OFF the Unit: AC Input Switched OFF/ Not Connected

To power OFF the unit, press and **hold** the ON/OFF Button (11, Fig 2.1) **for 5 seconds.**

- The Blue LED marked "ON" (11, Fig 2.1) will remain ON and after around 5 sec of pressing and holding the ON / OFF button, Red LED marked "Fault" will be lighted. Release the ON / OFF button after the Red LED "Fault" (13, Fig 2.1) has lighted. The unit will switch off thereafter. (**NOTE**: Power OFF will not take place unless the Power ON/OFF Button is released)
- **NOTE: As explained under paragraph (b) of "INFO" above, as long as AC input voltage > 70 ± 5 VAC is present, the unit CANNOT BE POWERED OFF using the ON/ OFF Button on the front panel of the unit or on the optional Remote Control EVO-RC-PLUS. In order to power off using the Power ON/Off Button, switch OFF the AC input first. Further, if the unit is in "Fault Mode", it will be possible to power OFF the unit with the ON/OFF Push Button**.

6.2 POWERING ON / OFF BY FEEDING EXTERNAL +12V SIGNAL TO TERMINALS MARKED "REMOTE ON/OFF" ON THE FRONT PANEL

The unit can be switched ON /OFF remotely by feeding 2 specified formats of +12VDC (+9 to15VDC, < 10mA) signals to terminals marked "Remote On / Off" on the Front Panel (16, Fig 2.1). The specified +12V signal formats are "Button Type" and "Switch Type". These 2 signal format options can be are programmed using the optional Remote Control EVO-RC Plus. These options are available under programmable parameter called REMOTE SWITCH grouped under "Select Parameter Menu Map for Group 5: OTHER FUNCTION". Please refer to the following Sections of the of the Manual for Remote Control EVO-RC-PLUS:

- Section 4.1.3.3, Fig 4.4: Screen No. 4 – "OTHER FUNCTION, REMOTE SWITCH"
- Section 4.8.1, Table 4.7: Srl No. 4 "REMOTE SWITCH"
  - 0=Button Type (Default); 1=Switch Type
- Section 4.8.2.4: Detailed explanation of programmable parameter REMOTE SWITCH

6.2.1 Button Type (Default)

This type of external +12V signal format is used when the signal is fed through an external series connected Push Button (+12V will be fed as long as the Push Button is kept pressed). Control logic used is as follows:

- When the EVO™ is in OFF condition, momentary feeding of +12V signal through the external Push Button for > 2 sec will turn the unit ON condition. The EVO™ will remain ON even when the Push Button is released
- When the EVO™ is in ON condition, momentary feeding of +12V signal through the external Push Button for > 5 sec will turn the EVO™ to OFF condition.

  NOTE: If the external Push Button is pressed for < 5 sec, the unit will NOT switch OFF

6.2.2 Switch Type

This type of external +12V signal format is used when the +12V signal (+9 to 15 VDC, < 10mA) is fed through an external, series connected On/Off Toggle / Rocker Switch or Relay contact (+12V signal will be fed continuously when the switch in ON condition / Relay contact is closed and +12V signal will be removed when the external On/Off switch is in OFF condition or the Relay contact is open). Example of this type of Remote On/Off Control signal format is the Ignition Switch in a vehicle. When the Ignition Switch is ON, 12V from the vehicle battery will be available. When the Ignition Switch is OFF, 12V will be switched OFF. Control logic used is as follows;

- When the external On/Off Switch is turned ON or when the Relay contact is closed, continuous +12V control signal will be made available and the EVO™ will turn ON. EVO™ will remain ON as long +12V control signal is available through the ON condition of the external On/Off Switch or the closed Relay contact
- When the external On/Off Switch is turned OFF or if the Relay contact opens, the +12V signal will be removed and the EVO™ will switch OFF

CAUTION!

When "Switch Type" of ON/OFF control described above is selected, the ON/OFF Button on the front panel of the unit (12, Fig 2.1) should NOT be used to turn ON or turn OFF the unit. The front panel ON/OFF Push Button will now follow the above "Switch Type" control logic wherein the unit will remain ON only as long as the Button is kept pressed and will turn OFF in 2 seconds after it is released.

ATTENTION!

Lorsque « Switch Type » de ON/OFF contrôle décrit ci-dessus est sélectionnée, le bouton ON/OFF sur le panneau avant de l'unité (12, Fig 2.1) ne devraient pas servir à allumer ou éteindre l'appareil. La façade, bouton poussoir ON/OFF suivra désormais la logique de contrôle ci-dessus « Switch Type » dans lequel l'appareil demeurera allumé aussi longtemps que la touche est maintenue enfoncée et s'éteint après 2 secondes après que qu'il est libéré.

6.3 OPERATIONAL INFORMATION THROUGH LEDS AND BUZZER

Table 6.1 shows the operational states of the unit indicated by the following LEDs on the front panel of the unit and Buzzer:

- **Blue LED marked "ON" (12, Fig 2.1)**
- **Red LED marked "Fault" (13, Fig 2.1)**

Optional Remote Control Model EVO-RC-PLUS will be required for more detailed messaging that is available through its LCD display and LEDs. This remote will also be required for programming of various parameters to suit specific requirements.

TABLE 6.1 LED AND BUZZER INDICATIONS

Status	Blue LED marked "ON" (12, Fig 2.1)	Red LED marked "Fault" (13, Fig 2.1)	Buzzer
Seen during Power-On Sequence Indicates completion of Power-On Sequence after Power ON/OFF Button is pressed for 2 sec	Flash 3 times	Off	Off
Seen during Power-Off Sequence Indicates completion of Power-Off Sequence after Power ON/OFF Button is pressed for 5 sec	On	On	Off
Normal charging	Flash 1 time per sec	Off	Off
Equalization charging	Flash 2 times per sec	Off	Off
Inverting (Discharging)	On	Off	Beep per 3 second (Default Off)
Low battery alarm	On	Flash 1 per sec	Beep per 1 second
Power saving	Flash 1 time per 3 sec	Off	Off
Standby (See CAUTION! at Section 6.7)	Off	Off	Off
Fault	Off	On	On

6.4 OPTIONAL REMOTE CONTROL EVO-RC-PLUS FOR PROGRAMMING OF MODES OF OPERATION AND PARAMETERS

Optional Remote Control Model EVO-RC-PLUS [Fig 2.4(a)] will be required for more advanced control and monitoring. Please see separate Owner's Manual for EVO-RC-PLUS. The Remote Control comes with 10M / 33 ft., RJ-45 Data Cable. The Remote plugs into RJ-45 Jack on the front panel of the unit (7, Fig 2.1). It has provision for Data Logging using SD Card of up to 16 GB (FAT16 / FAT32). It also has its own Real Time Clock and Super Capacitor Type of Battery.

Detailed messaging is available through its LCD display and LEDs. This remote will also be required for programming of various parameters to suit specific requirements. Each programmable parameter has a Default Value. This unit has been shipped with the various parameters set at the Default Values. Programmable and Default values are shown in Tables 6.2 to 6.6:

TABLE 6.2 PROGRAMMABLE AND DEFAULT PARAMETERS: GROUP "CHARGE CURVE"

Parameter	Programming Range (Programming requires optional Remote Control Model EVO-RC-PLUS)		Default	
	EVO-1212F EVO-1212F-HW	**EVO-1224F EVO-1224F-HW**	**EVO-1212F EVO-1212F-HW**	**EVO-1224F EVO-1224F-HW**
"BULK CURRENT" (Bulk Charge Current "Io")	0 - 60A	0 - 40A	20A	15A
"ABSORP VOLTAGE" (Absorption Voltage)	13.5V - 16.0V	27.0V - 32.0V	14.4V	28.8V
"EQUALIZE VOLTAGE" (Equalization Voltage)	14.0V - 16.0V	28.0V - 32.0V	14.4V	28.8V
"FLOAT VOLTAGE" (Float Voltage)	13.0V - 15.0V	26.0V - 30.0V	13.5V	27.0V
"COMPENSATE" (Temperature Compensation)	-3mV to -5mV /°C/Cell		-4mV /°C/Cell	
"BATT OVER VOLT" (Battery Over Voltage Shut Down)	14.0V - 17.0V	28.0V - 35.0V	16.0V	32.0V
"RESET VOLTAGE" (Battery Low Voltage Reset)	12.0V - 17.0V	24.0V - 35.0V	14.0V	28.0V
"LOW VOLT ALARM" (Battery Low Voltage Alarm)	9.5V - 12.5V	19.0V - 25.0V	11.0V	22.0V
"BATT LOW VOLTAGE" (Battery Low Voltage Shut Down)	9.1V - 12.0V	18.1V - 24.0V	10.5V	21.0V
"LV DETECT TIME" (Low Voltage Detect Time)	0-600 sec		10 sec	
"LV CUT OFF TIME" (Low Voltage Cut Off Time)	0-7200 sec		1200 sec	
"EQUALIZE-4STAGES" (3 or 4 Stage Charging)	0 = No 1 = Yes		0 = No	
"ONLINE MODE"	0 = Normal 1 = On Line 2 = Charger Only		0 = Normal	
"ONLINE OPTION"	0 = Option 1 1 = Option 2		0 = Option 1	

TABLE 6.2 PROGRAMMABLE AND DEFAULT PARAMETERS: GROUP "CHARGE CURVE" (Continued)				
	Programming Range (Programming requires optional Remote Control Model EVO-RC-PLUS)		Default	
Parameter	EVO-1212F EVO-1212F-HW	EVO-1224F EVO-1224F-HW	EVO-1212F EVO-1212F-HW	EVO-1224F EVO-1224F-HW
"RESET TO BULK"	10.0V to 13.0V	20.0V to 26.0V	12.0V	24.0V
"GS DETECT TIME"	0 - 600 sec		10 sec	
"GEN ON TIME"	0 - 240 min		60 min	
"GEN OFF DELAY"	0 - 240 min		60 min	
"ABSORP TIME"	0 - 600 min		60 min	
"ABSORP EXIT AMPS"	0 - 20A		4A	
"CHARGING PROFILE"	0 = 3 Stage Adaptive 1 = 3 Stage Type 1 2 = 3 Stage Type 2 3 = 2 Stage Type 1 4 = 2 Stage Type 2		0 = 3 Stage Adaptive	
"BATTERY TYPE"	0 = Lead Acid 1 = Lithium		0 = Lead Acid	

TABLE 6.3 PROGRAMMABLE AND DEFAULT PARAMETERS - GROUP "INPUT SETTING"					
		Programming Range		Default value	
Group	Parameter name	EVO-1212F EVO-1212F-HW	EVO-1224F EVO-1224F-HW	EVO-1212F EVO-1212F-HW	EVO-1224F EVO-1224F-HW
INPUT SETTING	DEFAULT FREQ	0 = 60Hz*		0 = 60Hz*	
	GRID MAX CURRENT	5 - 20A		20A	
	HIGH CUT OFF	50 – 70Hz		65Hz	
	HIGH RESET	50 – 70Hz		64Hz	
	LOW CUT OFF	40 – 60Hz		55Hz	
	LOW RESET	40 – 60Hz		56Hz	

* Fixed at 60Hz. Changing to other than 0 (say 1), will show "! 1 = xx Hz" meaning that Option 1 is invalid

TABLE 6.4 PROGRAMMABLE AND DEFAULT PARAMETERS - GROUP "INPUT LOW LIMIT"					
		Setting range		Default value	
Group	Parameter name	EVO-1212F EVO-1212F-HW	EVO-1224F EVO-1224F-HW	EVO-1212F EVO-1212F-HW	EVO-1224F EVO-1224F-HW
INPUT - LOW LIMIT	RESET VOLTAGE	60.0 – 120.0V		105.0V	
	CUT OFF VOLT 1	60.0 – 120.0V		100.0V	
	DETECT TIME 1	0 – 2000 cycle		300 cycle	
	CUT OFF VOLT 2	60.0 – 120.0V		95.0V	
	DETECT TIME 2	0 – 2000 cycle		60 cycle	
	CUT OFF VOLT 3	60.0 – 120.0V		90.0V	
	DETECT TIME 3	0 – 2000 cycle		1 cycle	

TABLE 6.5 PROGRAMMABLE AND DEFAULT PARAMETERS - GROUP "INPUT HIGH LIMIT"					
		Setting range		Default value	
Group	Parameter name	EVO-1212F EVO-1212F-HW	EVO-1224F EVO-1224F-HW	EVO-1212F EVO-1212F-HW	EVO-1224F EVO-1224F-HW
INPUT - HIGH LIMIT	RESET VOLTAGE	120.0 – 150.0V		125.0V	
	CUT OFF VOLT 1	120.0 – 150.0V		135.0V	
	DETECT TIME 1	0 – 2000 cycle		60 cycle	
	CUT OFF VOLT 2	120.0 – 150.0V		140.0V	
	DETECT TIME 2	0 – 2000 cycle		15 cycle	
	CUT OFF VOLT 3	120.0 – 150.0V		145.0V	
	DETECT TIME 3	0 – 2000 cycle		1 cycle	

TABLE 6.6 PROGRAMMABLE AND DEFAULT PARAMETERS - GROUP "OTHER FUNCTIONS"				
Parameter name	Setting range		Default Value	
	EVO-1212F EVO-1212F-HW	EVO-1224F EVO-1224F-HW	EVO-1212F EVO-1212F-HW	EVO-1224F EVO-1224F-HW
"POWER SAVING"	0 = Disable , 1 = Enable		0 = Disable	
• **"ENTER POINT"**	4 – 50W		6W	
• **"WAKE UP POINT"**	5 – 50W		7W	
"REMOTE SWITCH" • For ON /OFF control through external 12V signal fed to Remote ON / OFF terminals on the Front Panel (15, Fig 2.1)	**0 = Button Type**: 12V signal is fed through Push Button Type of Switch • Pressing of Push Button > 2 sec will switch the unit ON • When ON, pressing Push Button > 5 sec will turn the unit OFF **1 = Switch Type:** 12V signal is fed through contacts of Toggle Type of Switch or relay contact • ON condition (contacts closed) will turn the unit ON • OFF condition (contacts open) for 2 sec will switch the unit OFF		**0** = Button Type **CAUTION!** ON/OFF Logic also controls the operation of the ON/OFF Button on the front panel (11, Fig 2.1). The Default setting is "Button Type". If the ON/OFF Control is changed to external "Remote Switch", it will not be possible to switch ON/OFF the EVO™ Inverter/Charger from the front panel ON/OFF Push Button because it will work with Switch Type Logic. It will be ON only as long as the Push Buttom is kept pressed and will switch OFF when released.	
"COMM ID" (Communication ID for optional Remote Control EVO-RC-PLUS)	1 - 255		1	
"BUZZER"	0 = OFF ; 1 = ON		1 = On	
"DISCHARGE BEEP" (Beeping in "Discharging / Inverter Mode")	0 = OFF ; 1 = ON		0 = Off	
"DEFAULT RESET"	0 = No ; 1 = YES		0 = No	
DATA LOG TIME (For Optional Remote Control EVO-RC-PLUS)	0 = Disable 3 = 30 sec 6 = 10 min 1 = 1 sec 4 = 60 sec 2 = 10 sec 5 = 5 min		1 = 1 sec	
PARAMETER SAVE (For Optional Remote Control EVO-RC-PLUS)	0 = No 1 = Yes		0 = No	
TEMP UNIT	0 = C ; 1 = F		0 = C	
PASSWORD DISABLE	0 = No ; 1 = Yes		0 = No	

6.5 PROTECTIONS, FAULT MESSAGES AND TROUBLESHOOTING GUIDE

The front panel of the unit has a Red LED marked "FAULT" (13, Fig 2.1). This LED will light up (steady) when the unit registers any of the **FAULT MODE** situations shown in Table 7.1 of EVO-RC-PLUS Manual.

Table 7.1 of EVO-RC-PLUS Manual shows details of protections and associated Fault/Error Messages that will be displayed on the LCD screen of the optional Remote Control EVO-RC-PLUS.

NOTE: If the optional Remote Control EVO-RC-PLUS is not used, it may be difficult to narrow down the probable cause of the fault.

6.6 POWERING OFF THE UNIT IN FAULT MODE

If the unit is in "Fault Mode", it will be possible to power OFF the unit with the ON/OFF Push Button.

(As explained under Section 6.1.2, as long as AC input voltage > 70 ± 5 VAC is present, the unit CANNOT BE POWERED OFF using the ON / OFF Button on the front panel of the unit or on the optional Remote Control EVO-RC-PLUS. In order to power off using the Power ON/Off Button, switch OFF the AC input first).

6.7 STANDBY MODE

When the EVO™ is in Standby Mode, it will stop inverting or charging / pass through.

INFO

Standby Mode may be used to temporary halt normal operation of the Inverter Charger without switching OFF the unit completely.

For the Standby Mode to be switched ON, the EVO™ should be in ON condition and should be operating in one of the 3 Operating Modes – "Inverting" or "Charging" or "Power Save" (See Fig 3.1 of the EVO-RC-PLUS Owner's Manual). When Standby Mode is switched ON, the EVO™ will exit its Operating Mode.

Standby Mode is toggled between ON and OFF conditions as follows:

- By momentary pressing (0.1 sec) of ON/OFF Push Button on the front panel of the unit (11, Fig 2.1)
- By momentary pressing (0.1 sec) of ON/OFF Push Key on the optional Remote Control EVO-RC-PLUS [2, Fig 2.4(a)]

When the EVO™ is in "Standby Mode", operational status will be displayed as follows:

- **On the front panel of EVO™:**
  - No LED display. Blue LED marked "ON" (12, Fig 2.1) and Red LED marked "FAULT" (13, Fig 2.1) will both be OFF.
  - No buzzer

- **On the Remote Control EVO-RC-PLUS:**
  - No LED display. Blue LED marked "Status" (3, Fig 2.4a) and Red LED marked "FAULT" (4, Fig 2.4a) will both be off
  - The LCD will display information on 9 scrollable screens as shown at Fig 3.1 - "Menu Map for Standby Mode Screens" in EVO-RC-PLUS Manual.
  - No buzzer

CAUTION!

When EVO™ is operating normally, the front panel Blue LED marked "ON" (12, Fig 2.1) will be ON or flashing based on the operational status of EVO™ (TABLE 6.1). If the ON / OFF Push Button (11, Fig 2.1) gets accidentally pressed momentarily, the EVO™ will switch over to Standby Mode and normal operation will be interrupted. There will be no LED display on the front panel of the EVO™: Blue LED marked "ON" (12, Fig 2.1) and Red LED marked "FAULT" (13, Fig 2.1) will both be OFF. The buzzer will also be OFF. If Remote Control EVO-RC-PLUS was not being used for monitoring, the user may think that the unit has quit working / become defective. **Hence, if at any time during the operation of EVO™, no LED activity is seen on the front panel of the unit, it is likely that the unit may have been switched over to "Standby Mode" accidentally. To exit from "Standby Mode" and revert to the normal operating mode , press the ON/OFF Push Button on the front panel of the unit (11, Fig 2.1) momentarily (0.1 sec).** If the EVO™ does not switch over to normal operating mode, carry out further troubleshooting.

ATTENTION!

Lorsque l'EVO™ fonctionne normalement, le panneau d'avant LED bleu marquée «ON» (12, figure 2,1) sera ON ou clignotera en fonction de l'état opérationnel de l'EVO™ (tableau 6,1). Si le bouton ON/OFF (11, figure 2,1) est accidentellement poussé momentanément, l'EVO™ déclenchera en mode veille et le fonctionnement normal sera interrompu. Il n'y aura pas d'affichage LED sur la face avant de l'EVO™: LED bleu marquée «ON» (12, figure 2,1) et LED rouge marqué "FAUTE" (13, figure 2,1) seront tous les deux OFF. La sonnerie sera également OFF. Si le EVO-RC-PLUS n'a pas été utilisé pour la surveillance, l'utilisateur peut penser que l'appareil a cessé de travailler / devenu défectueux. **Ainsi, si à tout moment pendant le fonctionnement de l'EVO™, aucune activité de LED est visible sur la face avant de l'appareil, il est probable que l'unité peut avoir été mise en "mode veille" accidentellement. Pour sortir du "mode veille" et revenir au mode de fonctionnement normal, appuyez sur le bouton ON/ OFF sur le panneau avant de l'appareil (11, figure 2,1) momentanément (0,1 sec).** *Si l'EVO™ ne se met pas en mode de fonctionnement normal, effectuer un dépannage plus approfondi.*

SECTION 7 | Specifications

Models	EVO-1212F EVO-1212F-HW	EVO-1224F EVO-1224F-HW
INVERTER SECTION		
Output Waveform	Pure Sine Wave	
Input Battery Voltage Range	9.1 - 17 VDC	18.1 - 34 VDC
Nominal AC Output Voltage	120 VAC ± 5%	
Output Frequency	60 Hz ± 0.1 Hz	
Total Harmonic Distortion of Pure Sine Wave Form (THD)	< 5%	
Continuous Output Power and Power Factor (PF)	1200 Watt at PF = 0.95	
Continuous AC Output Current	10A	
Surge Power for 1 msec	300% (3600VA, 30A)	
Surge Power for 100 msec	200% (2400VA, 20A)	
Power Boost for 30 sec	150% (1800W at PF = 0.95)	
Power Boost for 1 min	140% (1680W at PF = 0.95)	
Power Boost for 10 min	120% (1440W at PF = 0.95)	
Power Boost for 30 min	110% (1320W at PF = 0.95)	
Maximum Continuous DC Input Current	152A	76A
Inverter Efficiency (Peak)	89%	91%
No Load Power Consumption in Power Saving Mode	< 8 W	
No Load Power Consumption in Normal Mode (120 VAC Output, Typical)	20 watts	20 watts
No load Power Consumption in Standby Mode	< 5W	
AC INPUT		
AC Input Voltage	120VAC (60-140VAC +/- 5% selectable)	
AC Input Frequency	60Hz	
Maximum Programmable AC Input Current (GRID MAX CURRENT)	5 - 20A (Default - 20A)	
AC Input Breaker Size	20A (i) EVO-1212F and EVO-1224F have built-in Breaker (ii) For EVO-1212F-HW and EVO-1224F-HW, breaker has to be installed externally by the installer / user.	

SECTION 7 | Specifications

Models	EVO-1212F EVO-1212F-HW	EVO-1224F EVO-1224F-HW
TRANSFER CHARACTERISTICS		
Transfer Relay Type and Capacity	SPDT, 30A	
Transfer Time – Inverter to Grid / Generator	< 1 ms (Synchronized transfer at zero crossing)	
Transfer Time – Grid / Generator to Inverter	Up to 18ms (Synchronized transfer at zero crossing)	
INTERNAL BATTERY CHARGER SECTION		
AC Input Voltage Range	120 VAC (60 to 140 VAC +/-5% selectable) ; 60 Hz	
Max Continuous AC Input Current	11.2A, AC (At BULK CURRENT = 60 ADC)	11.2A, AC (At BULK CURRENT = 40 ADC)
AC Input Power Factor (PF)	> 0.95	
Programmable Bulk Charging Current	0 - 60A, DC	0 - 40A, DC
Programmable Charging Voltages : **Bulk / Absorption Stage** **Float Stage** **Equalization Stage**	 13.5 to 16.0V (Default 14.4V) 13.0 to 15.0V (Default 13.5V) 14.0 to 16.0V (Default 14.4V)	 27.0 to 32.0V (Default 28.8V) 26.0V to 30.0V (Default 27.0V 28.0 to 32.0V (Default 28.8V)
Charger Efficiency	75%	86%
Programmable Charging Profiles	• 3 profiles under 3-Stage Charging: Bulk, Absorption, Float • 1 profile under 4-Stage Charging: Bulk, Absorption, Equalize, Float • 2 profiles under 2-Stage Charging: Bulk, Absorption	
Battery Temperature Compensation	• Battery Temperature Sensor EVO-BTCS included • Compensation Range from -20° C to 60° C	
EXTERNAL BATTERY CHARGER SECTION (Solar Charge Controller)		
Charging Voltage Range	13 - 16 VDC	26 - 32 VDC
Maximum Charging Current	50A	
COOLING, PROTECTIONS AND ALARMS		
Cooling	2 Fans – Temperature Controlled, Variable Speed	
Protections and Alarms	Battery Low Voltage Alarm and Low / Over Voltage Shut Down	
	Shut Down under Input Over Current, Output Over Current, Output Overload and Output Short	
	Transformer and Heat Sink Overheat Shut Down	
	Immunity Against Conducted Electrical Transients in Vehicles	
Built-in Over Current Breakers	Input: 20A Output: 15A • For EVO-1212F and EVO-1224F only. • To be installed externally for EVO-1212F-HW and EVO-1224F-HW	

SECTION 7 | Specifications

Models	EVO-1212F EVO-1212F-HW	EVO-1224F EVO-1224F-HW
INPUT AND OUTPUT CONNECTIONS		
Battery Connection	• Stud and Nut: M8 (Pitch1.25mm)	
External Charge Controller Connection	• Stud and Thumb Nut: M6 (Pitch 1mm)	
AC Input Connection	(i) **EVO-1212F and EVO-1224F:** • IEC 60320 C-20 Male Power Inlet Plug. Requires 20A Detachable Power Cord with mating IEC 60320 C-19 Socket Connector and NEMA5-20P Plug (ii) **EVO-1212F-HW and EVO-1224F-HW:** • Terminal Block	
AC Output Connection	(i) **EVO-1212F and EVO-1224F**: • NEMA5-15P, Duplex GFCI Outlet, 15A (ii) **EVO-1212F-HW and EVO-1224F-HW**: • Terminal Block	
OPTIONAL REMOTE CONTROL		
Model No.	• EVO-RC-PLUS	
Specifications	• Advanced Features for programming various parameters and modes of operation • 4 Rows of 20 Character Alpha Numeric LCD Display for messaging • Up to 16 GB SD Card Slot for Data Logging • Comes with 10M / 33ft RJ-45 Data Cable	
COMPLIANCE		
Safety Compliance	• Intertek-ETL listed: Certified to CAN / CSA STD. C22.2 No. 107.1-01 • Intertek-ETL listed: Conforms to ANSI / UL STD. 458	
EMI / EMC Compliance	• Certified to FCC Part 15(B), Class A	
ENVIRONMENTAL SPECIFICATIONS		
Operating Temperature	-20° C to +60° C (-4° F to 140° F)	
Storage Temperature	-40° C to +70° C (-40° F to 158° F)	
Operating Humidity	0 to 95% RH non condensing	
WEIGHTS AND DIMENSIONS		
Dimensions: W x D x H	324 x 415 x 148 mm; 12.76 x 16.34 x 5.83 in	
Weights:	17.6 Kg / 38.8 lb	17.6 Kg / 38.8 lb

NOTES:

(1) All AC power ratings in the Inverter Section are specified at Power Factor = 0.95

(2) All specifications given above are at ambient temperature of 25°C / 77°F unless specified otherwise

(3) Specifications are subject to change without notice

SECTION 8 | Warranty

2 YEAR LIMITED WARRANTY

EVO™ Series Inverter/Chargers manufactured by Samlex America Inc. (the "Warrantor") are warranted to be free from defects in workmanship and materials under normal use and service. The warranty period is 2 years for the United States and Canada, and is in effect from the date of purchase by the user (the "Purchaser").

Warranty outside of the United States and Canada is limited to 6 months. For a warranty claim, the Purchaser should contact the place of purchase to obtain a Return Authorization Number.

The defective part or unit should be returned at the Purchaser's expense to the authorized location. A written statement describing the nature of the defect, the date of purchase, the place of purchase, and the Purchaser's name, address and telephone number should also be included.

If upon the Warrantor's examination, the defect proves to be the result of defective material or workmanship, the equipment will be repaired or replaced at the Warrantor's option without charge, and returned to the Purchaser at the Warrantor's expense. (Contiguous US and Canada only) using a carrier of the warrantor's choice.

Warranty service shall be performed only by the Warrantor. Any attempt to remedy the defect by anyone other than the Warrantor shall render this warranty void. The warranty does not apply to units with a serial number that has been altered, removed or modified in any way.

There is no warranty for defects or damages to equipment or parts caused by:

- Installation, alternation, inspection or removal
- Normal wear and tear
- Abuse or misuse of the equipment including exposure to excessive heat, salt or fresh water spray, or water immersion
- Corrosion, fire, lightening, biological infestations or Acts of God
- Repairs attempted by anyone other than the Warrantor
- Improper use, contrary to operational instructions provided in product manual
- Shipping or transport

No other express warranty is hereby given and there are no warranties which extend beyond those described herein. This warranty is expressly in lieu of any other expressed or implied warranties, including any implied warranty of merchantability, fitness for the ordinary purposes for which such goods are used, or fitness for a particular purpose, or any other obligations on the part of the Warrantor or its employees and representatives.

There shall be no responsibility or liability whatsoever on the part of the Warrantor or its employees and representatives for injury to any persons, or damage to person or persons, or damage to property, or loss of income or profit, or any other consequential or resulting damage which may be claimed to have been incurred through the use or sale of the equipment, including any possible failure of malfunction of the equipment, or part thereof. The Warrantor assumes no liability for incidental or consequential damages of any kind.

Samlex America Inc. (the "Warrantor")
www.samlexamerica.com

Notes

Notes

Notes

Contact Information

Toll Free Numbers
Ph: 1 800 561 5885
Fax: 1 888 814 5210

Local Numbers
Ph: 604 525 3836
Fax: 604 525 5221

Website
www.samlexamerica.com

USA Shipping Warehouses
Kent, WA
Plymouth, MI

Canadian Shipping Warehouse
Delta, BC

Email purchase orders to
orders@samlexamerica.com

samlexamerica®

11027-EVO-1212F-1224F-0418